Table of Contents

Title	Number
Angled Cut End Lap	MB-1
Staggered End End Lap	MB-2
Roof Edge with Base Flashing and Cap Sheet Flashing	MB-3
Vent Pipe Flashing	MB-4
Support Column Flashing	MB-5
Parapet/Curb Flashing on All Substrates	MB-6
Shingle Roof Tie-In	MB-7
Reglet Mounted Counter Flashing	MB-8
Surface Mounted Counter Flashing	MB-9
Masonry Coping	MB-10
Metal Coping (24" Max. Parapet Height)	MB-11
Through Wall Scupper	MB-12
Downspout Scupper Box	MB-13
Cast Iron Roof Drain	MB-14
Raised Expansion Joint	MB-15
Roof Level Expansion Joint	MB-16
Wall Expansion Joint	MB-17
HVAC Unit	MB-18
Built-Up Roof Tie-In New Roof at Same Level	MB-19
Built-Up Roof Tie-In with Tapered Edge	MB-20
New Pitch Pan with Single Section Flashing	MB-21
Support Sleeper	MB-22
Outside Corner	MB-23
Inside Corner without Cant Strip	MB-24
Termination Bar	MB-27
Base Sheet Perimeter Attachment – Horizontal	MB-28
Base Sheet Perimeter Attachment – Vertical	MB-29
Base Sheet Perimeter Attachment – Angle	MB-30
Protectobase at Parapet Detail	MB-31
Protectobase Pre-Strip at Vertical	MB-32
Perimeter Flame Free	FF-1
Perimeter Flame Free – Low Temperature	FF-2

Angled Cut End Lap

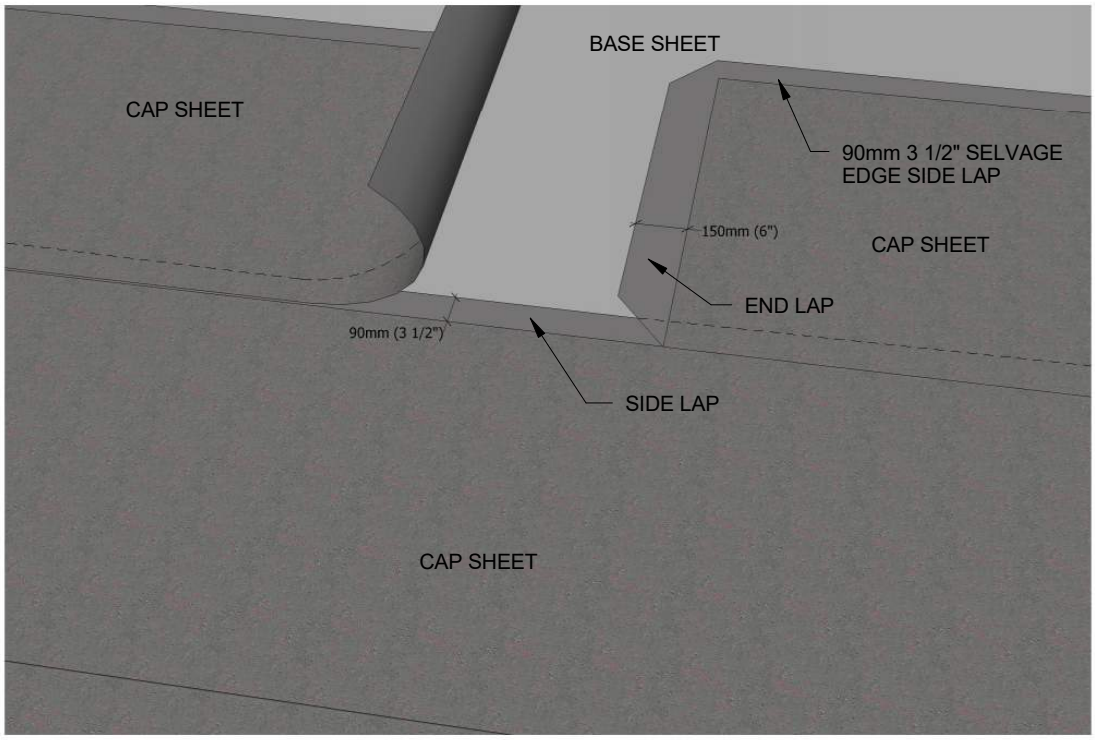

Staggered End End Lap

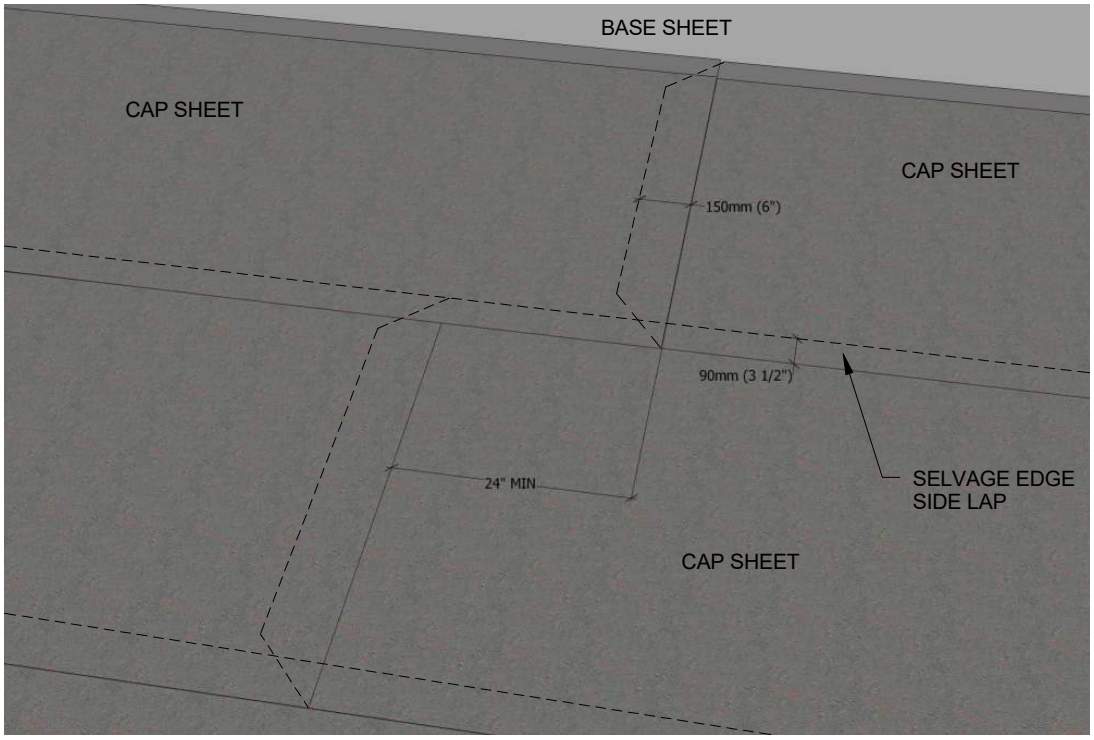

DETAIL NUMBER: **MB-3**

IKO COMMERCIAL
Specify with Confidence.

Roof Edge with Base Flashing and Cap Sheet Flashing

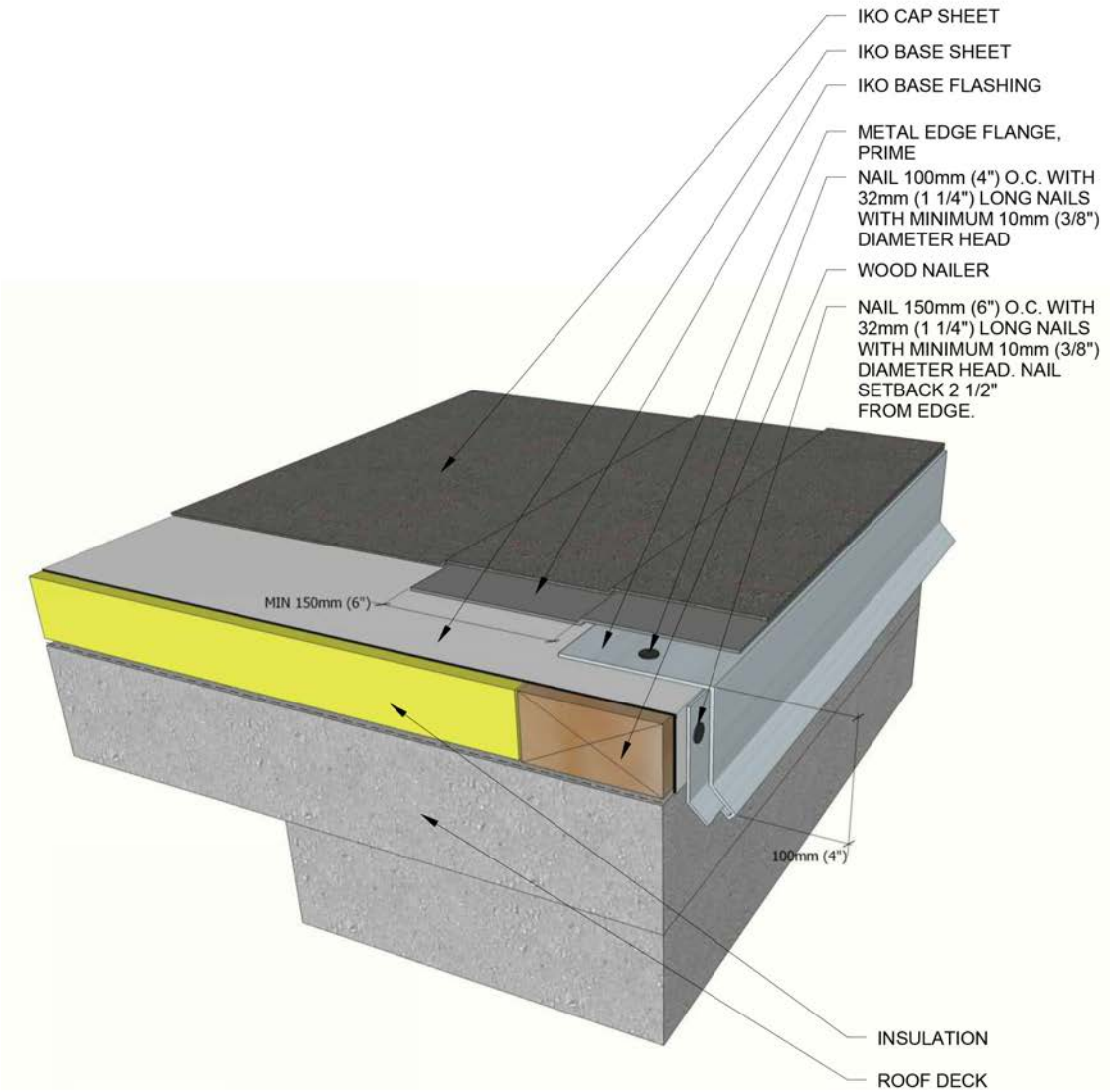

Vent Pipe Flashing

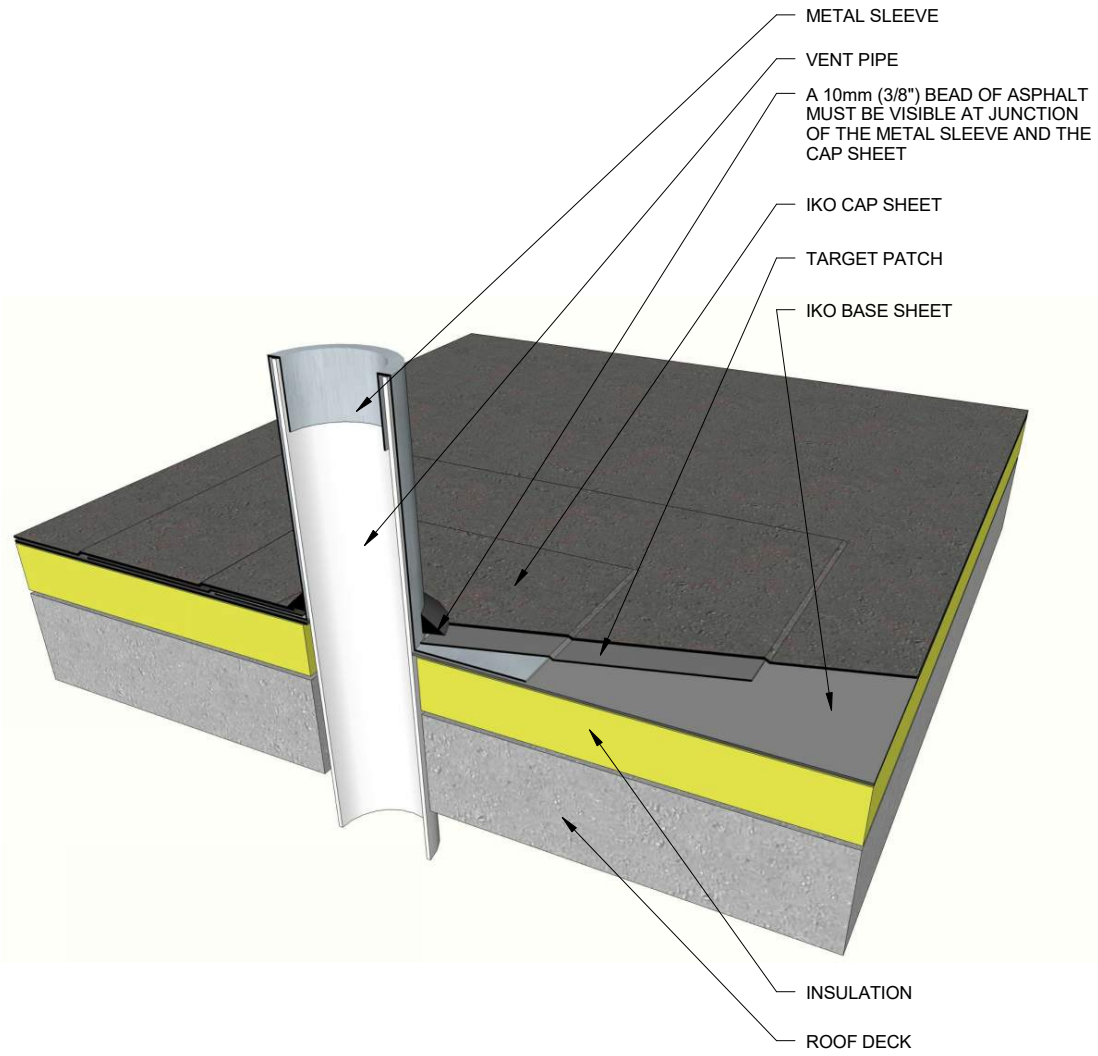

DETAIL NUMBER: **MB-5**

IKO COMMERCIAL
Specify with Confidence.

Support Column Flashing

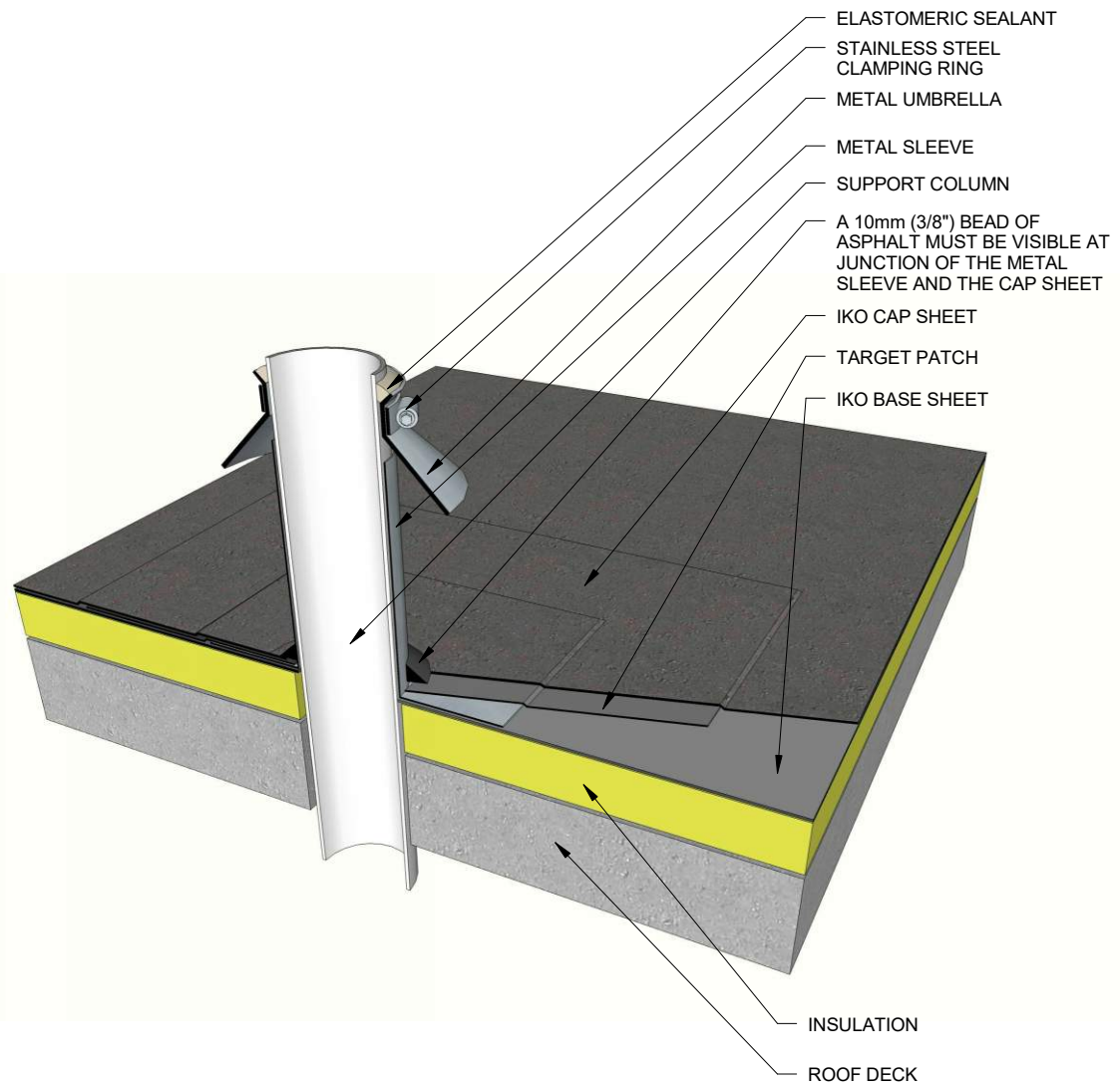

Parapet/Curb Flashing on All Substrates

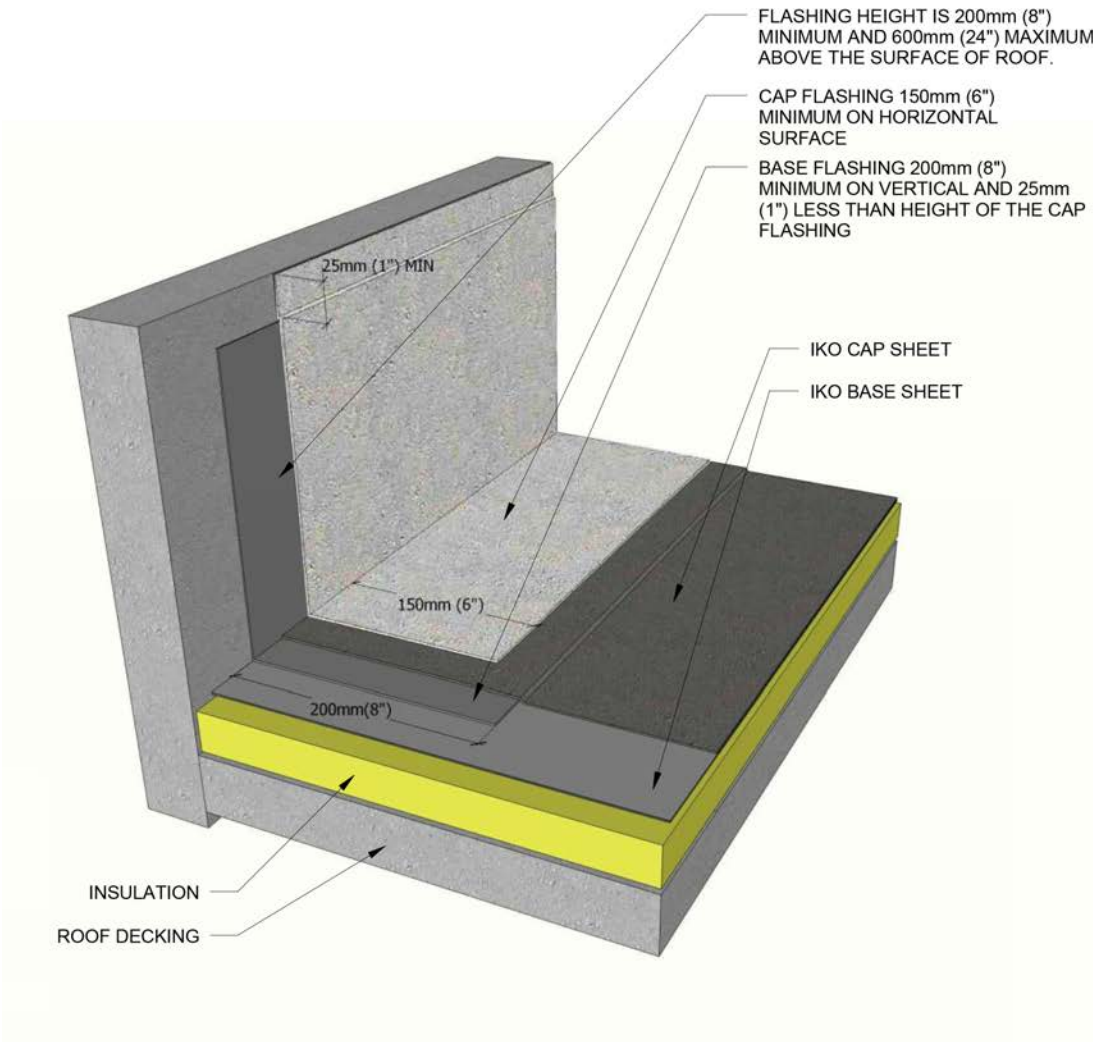

DETAIL NUMBER: **MB-7**

IKO COMMERCIAL
Specify with Confidence.

Shingle Roof Tie-In

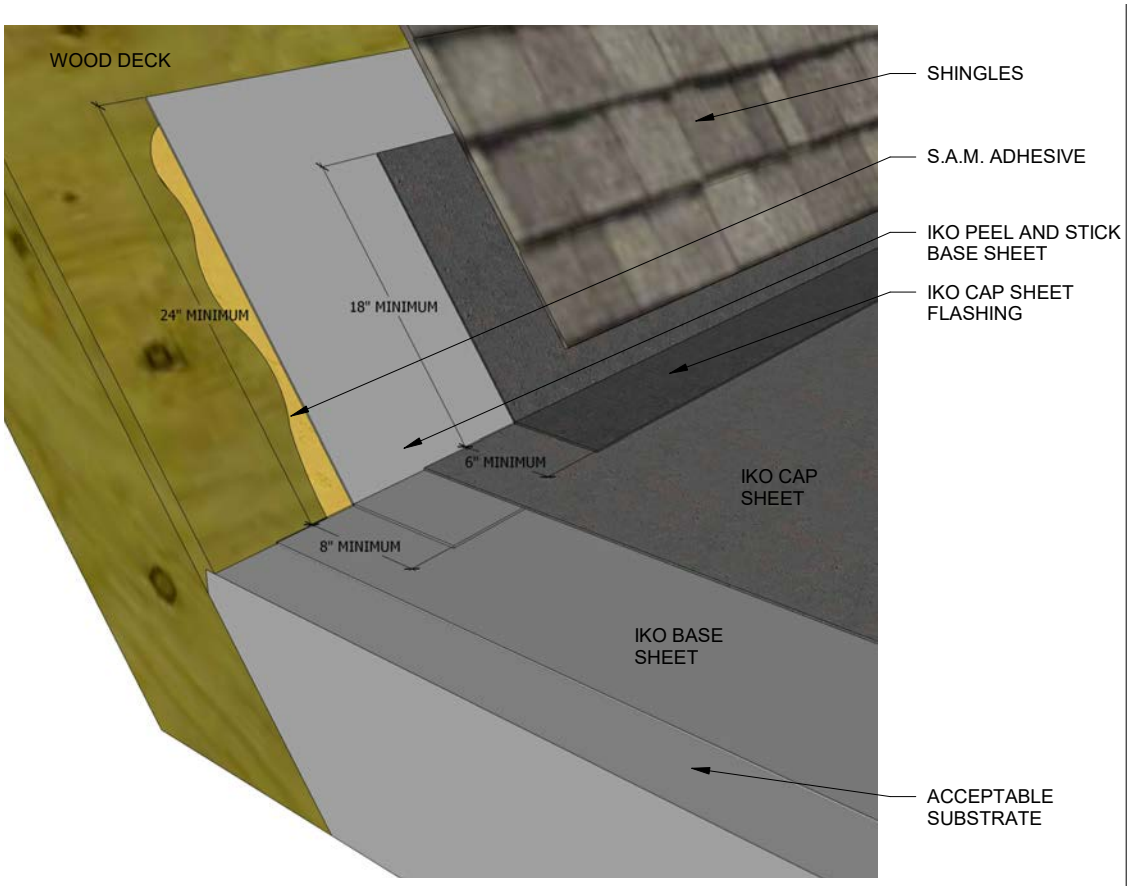

Reglet Mounted Counterflashing

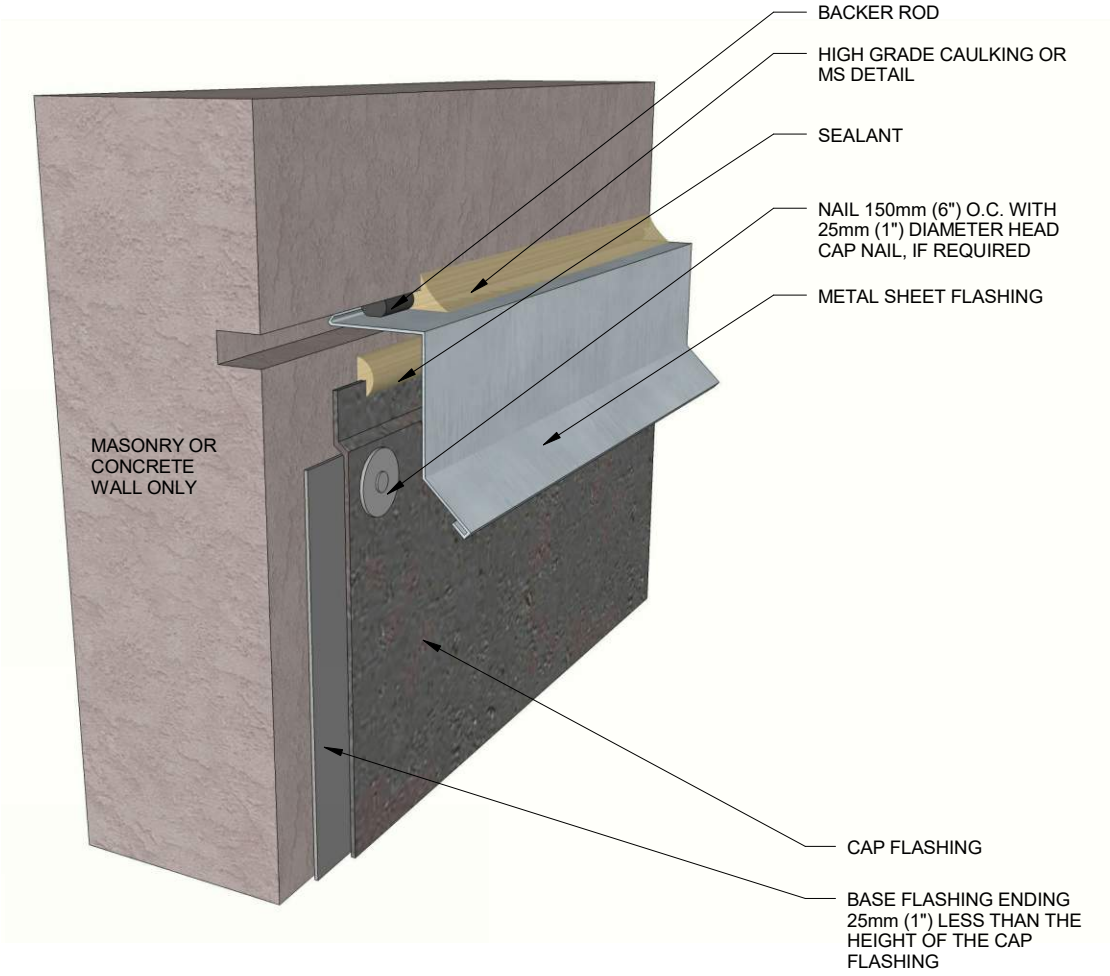

Surface Mounted Counterflashing

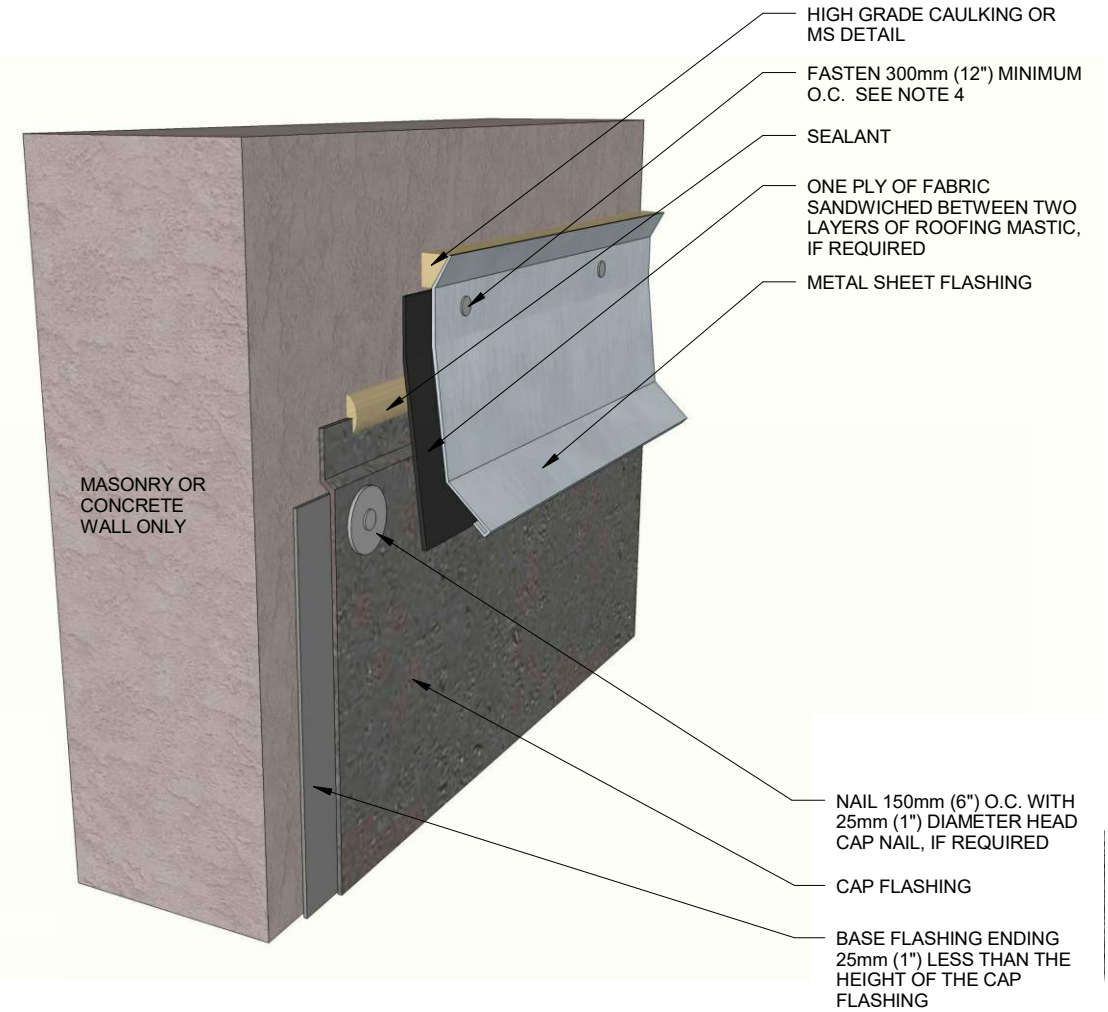

Masonry Coping

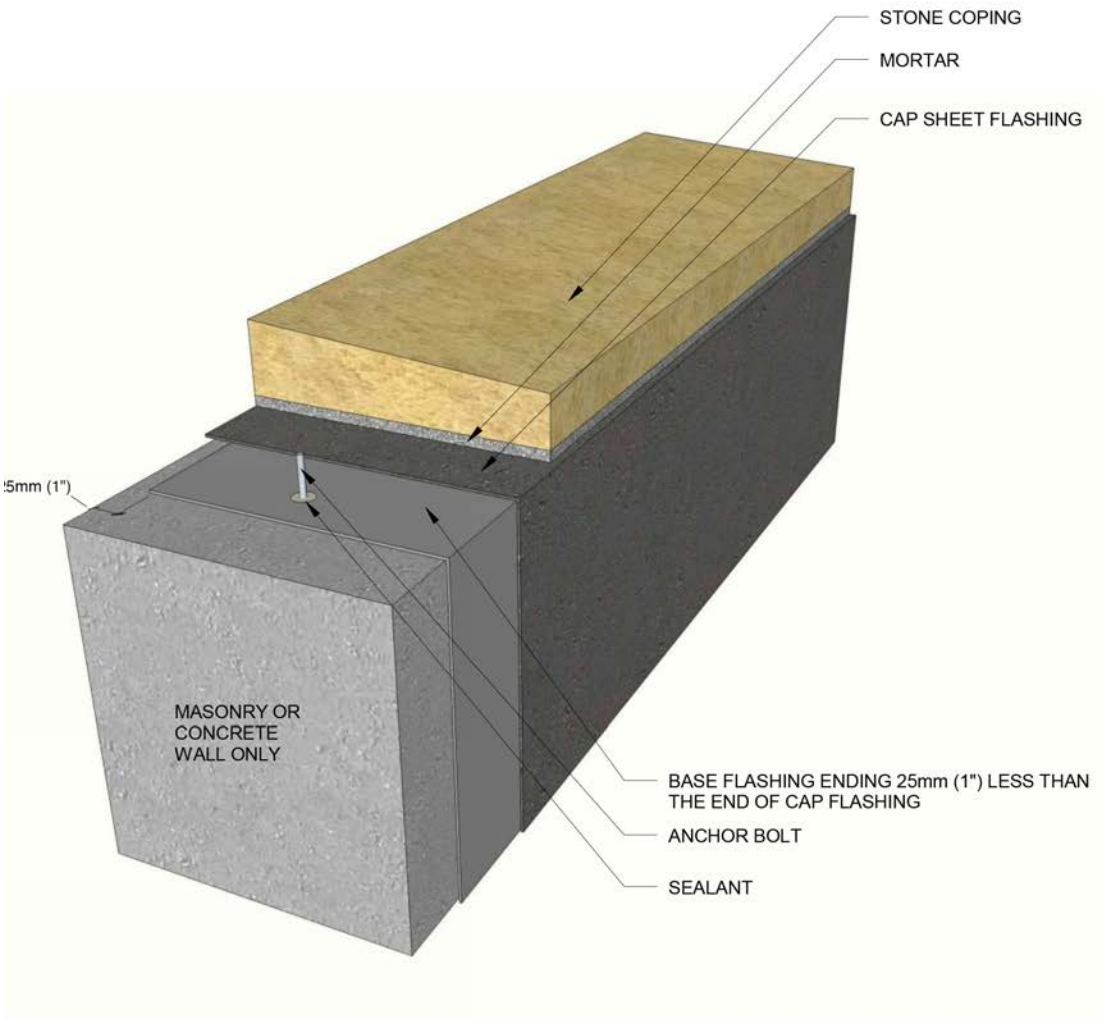

Metal Coping (24" Max. Parapet Height)

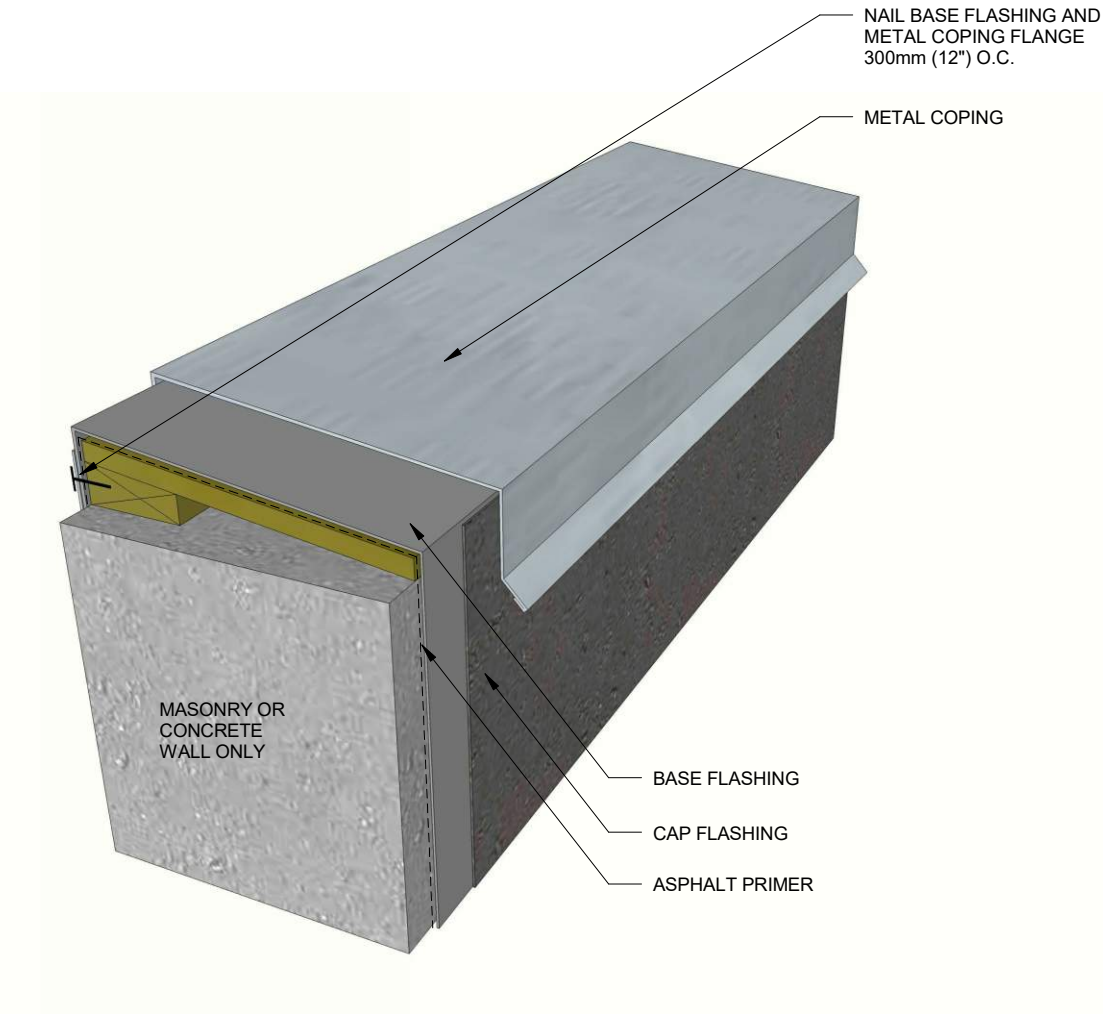

Through Wall Scupper

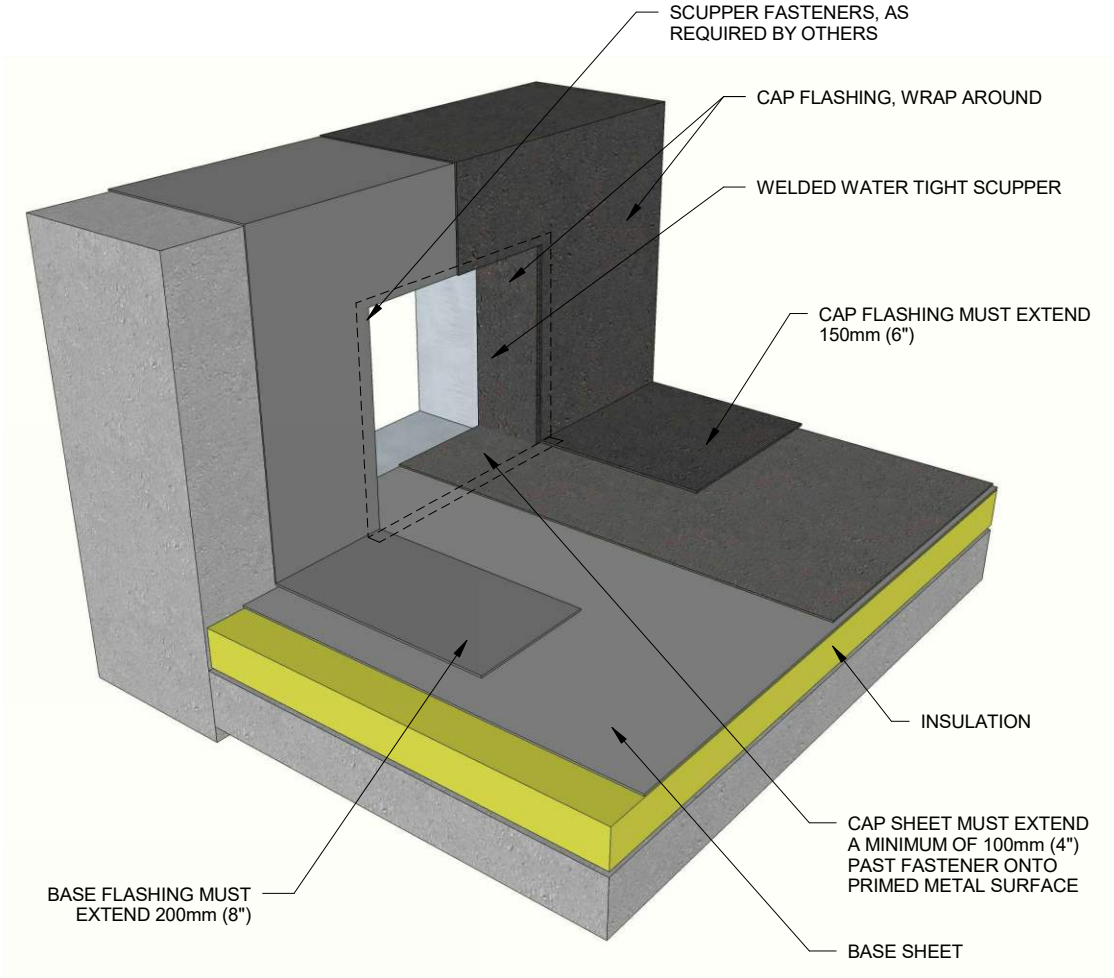

Downspout Scupper Box

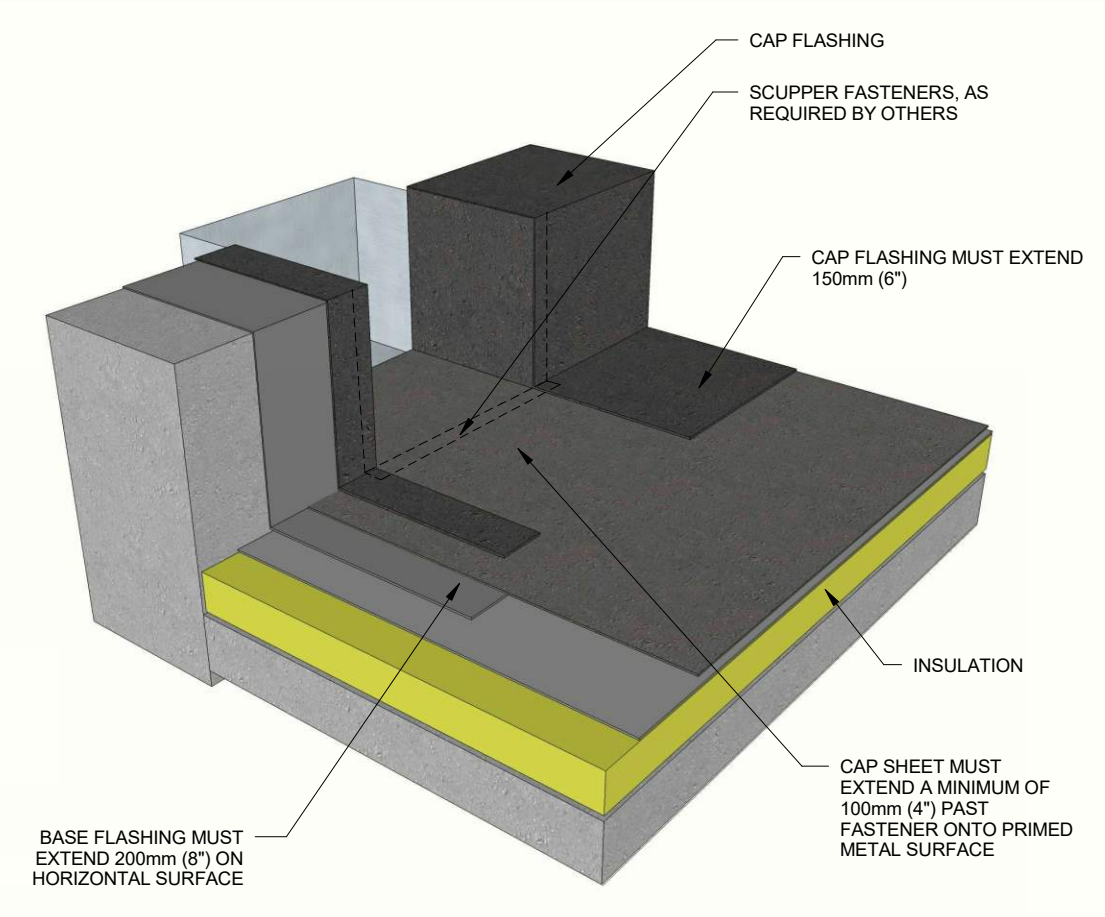

Cast Iron Roof Drain

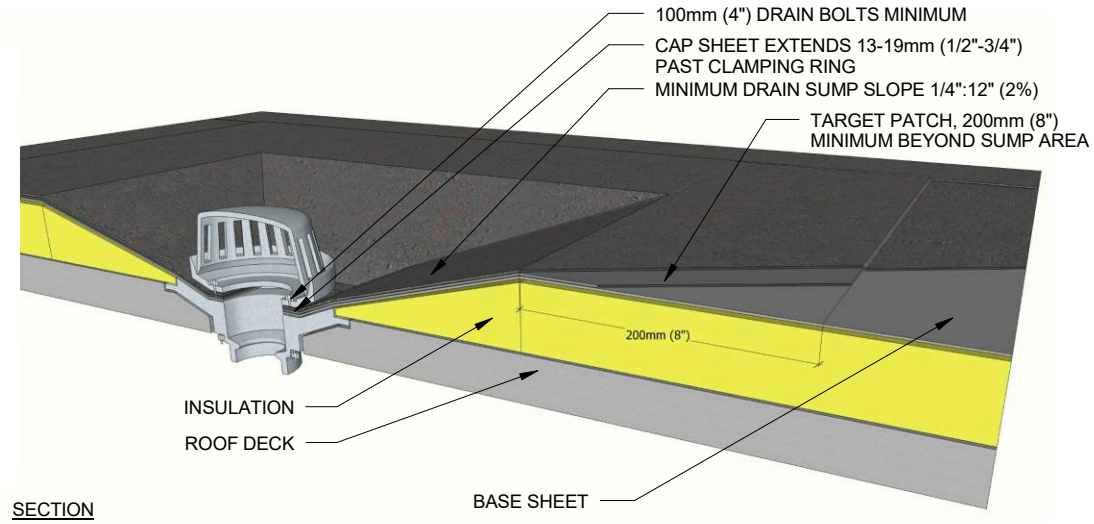

SECTION

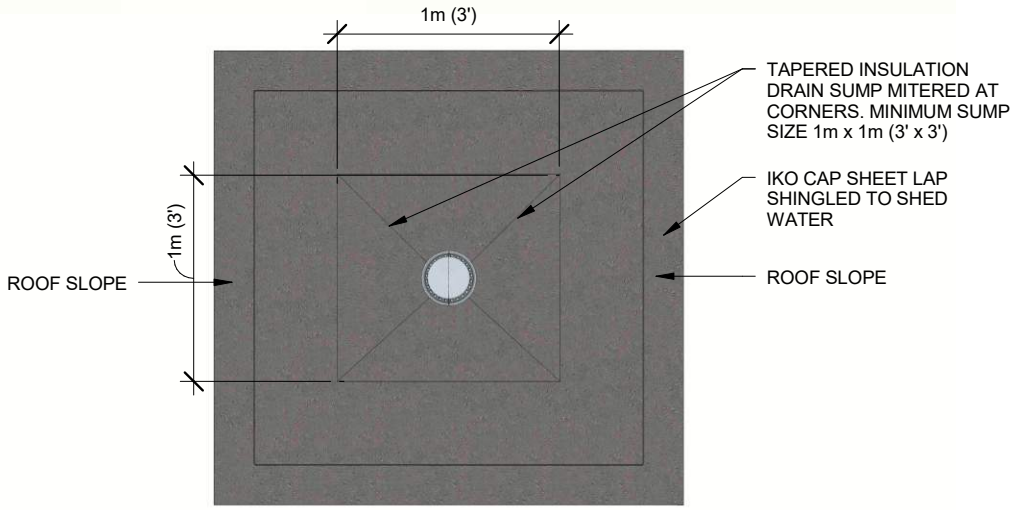

PLAN

Raised Expansion Joint

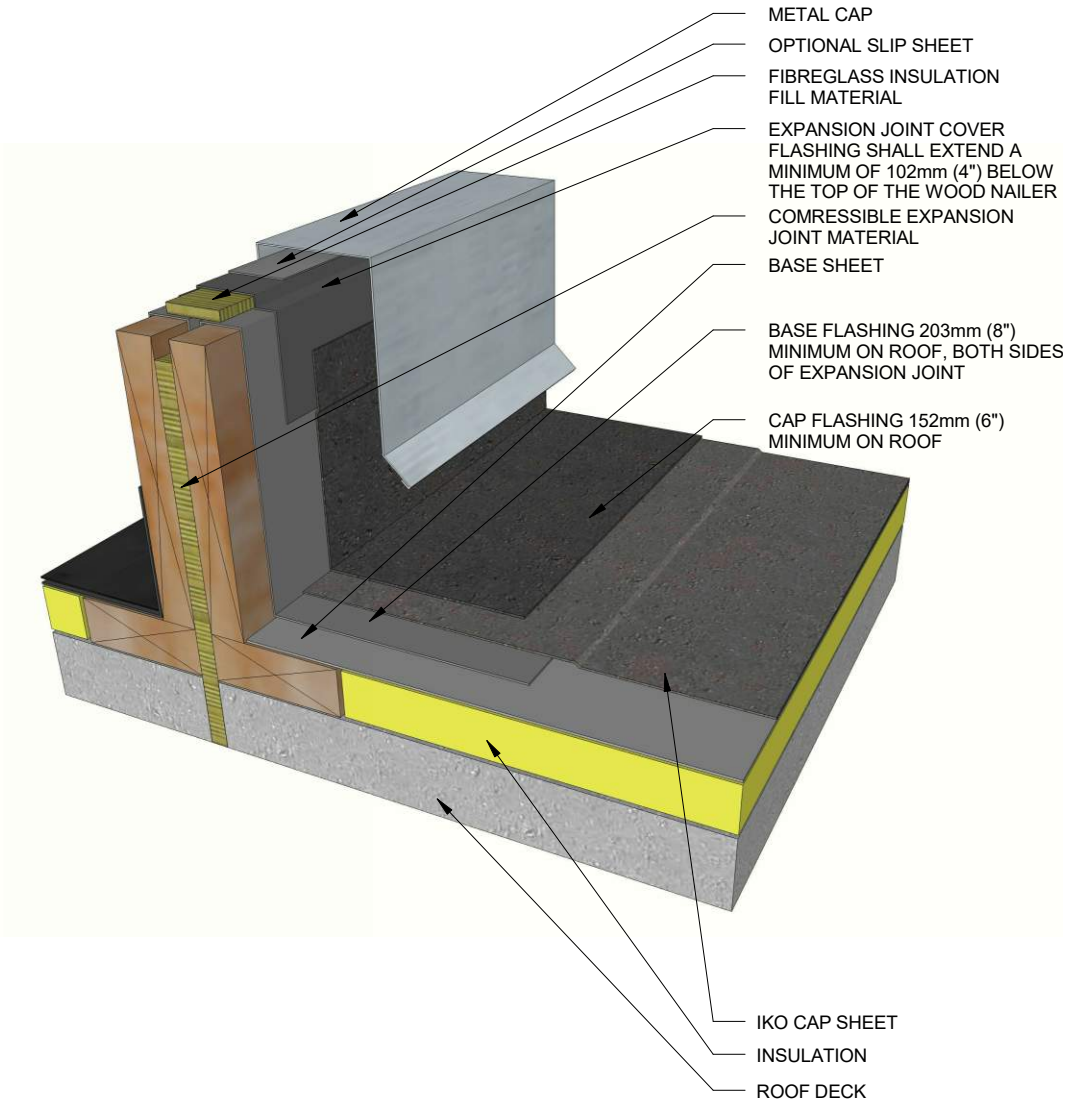

Roof Level Expansion Joint

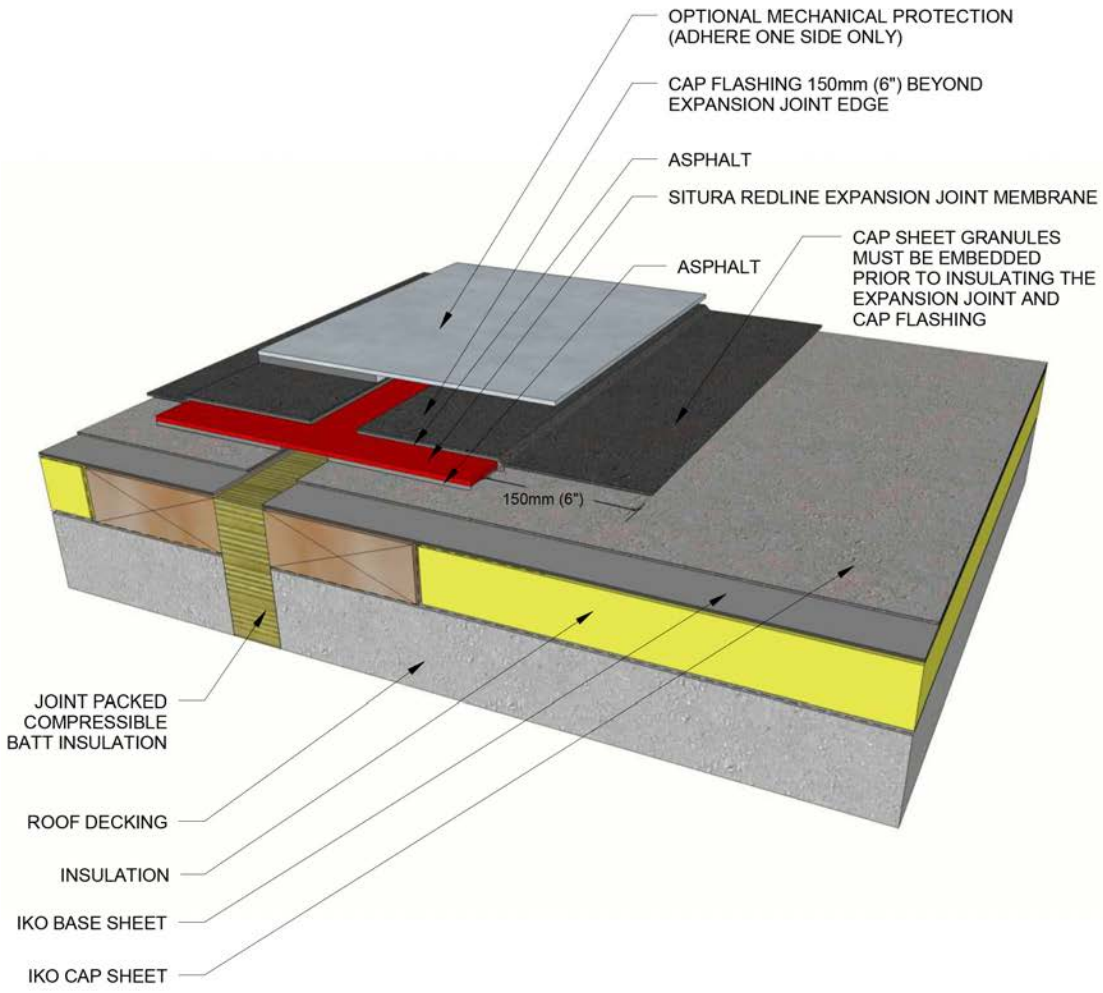

DETAIL NUMBER: **MB-17**

IKO COMMERCIAL
Specify with Confidence.

Wall Expansion Joint

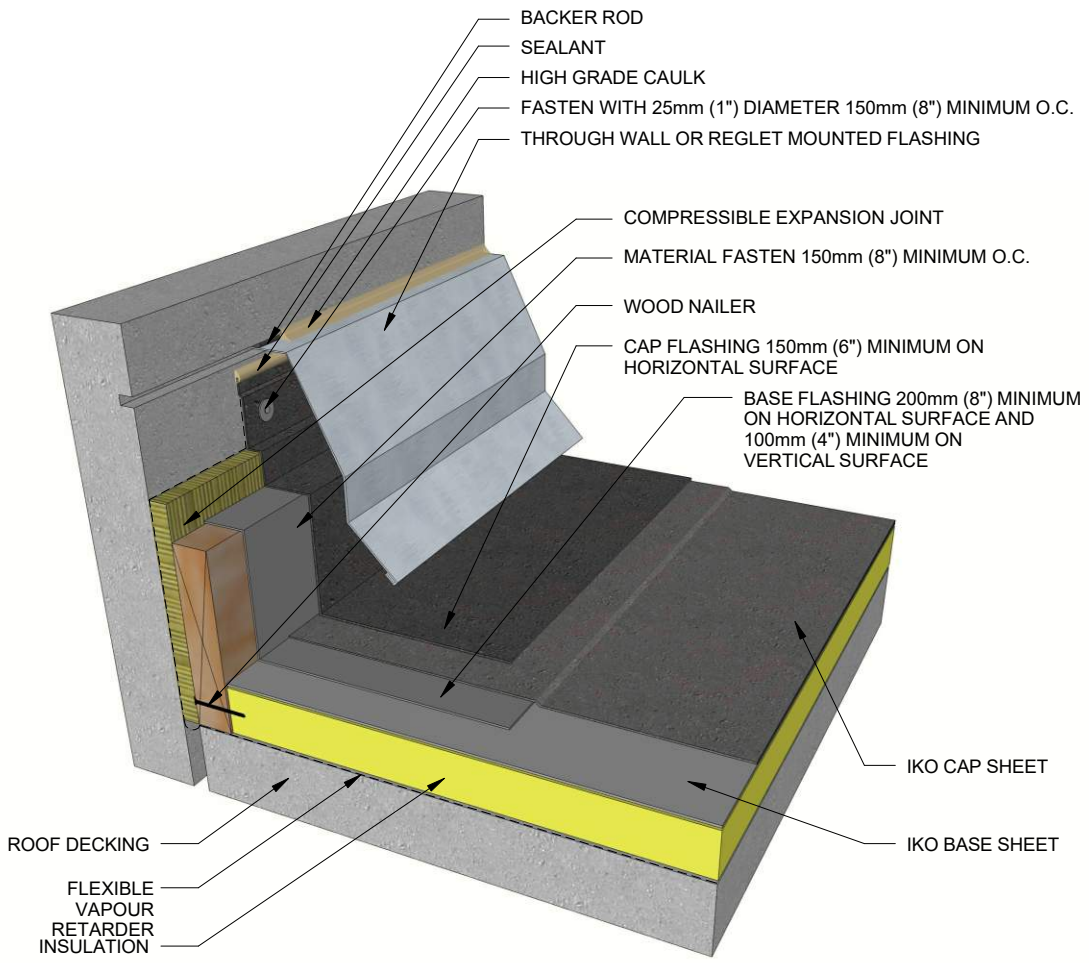

HVAC Unit

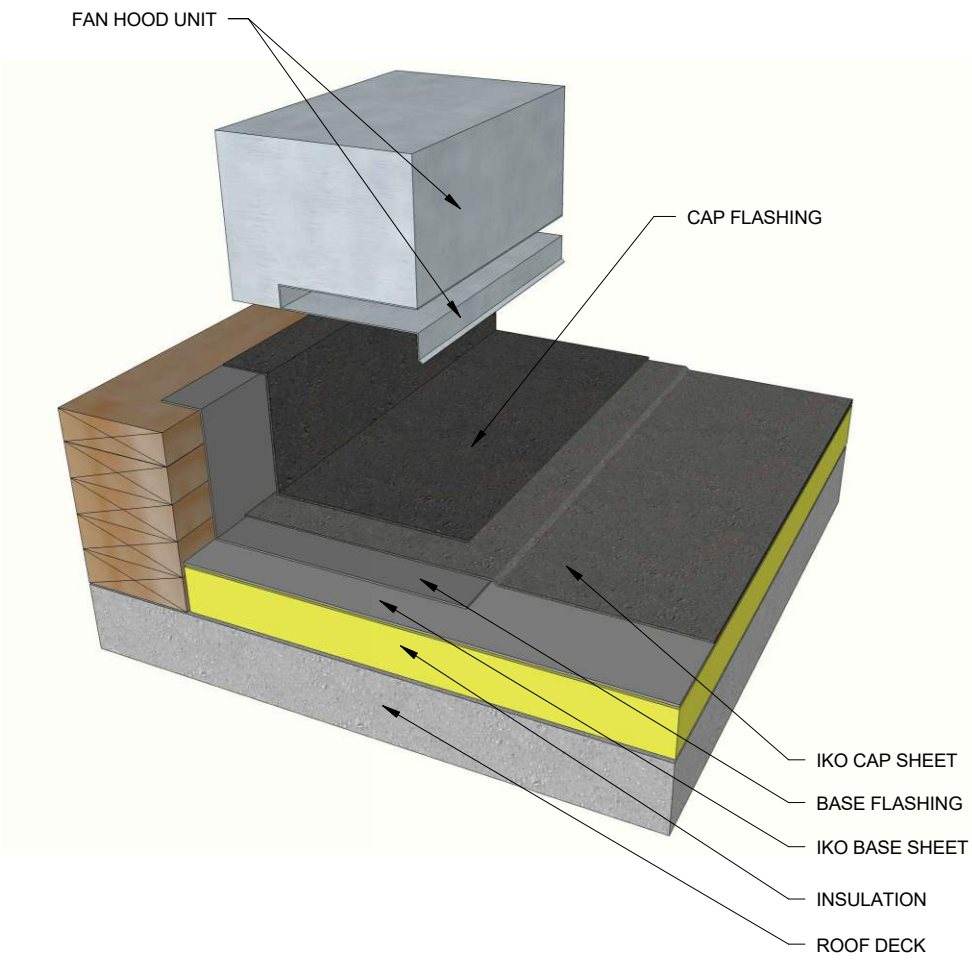
FAN HOOD UNIT
CAP FLASHING
IKO CAP SHEET
BASE FLASHING
IKO BASE SHEET
INSULATION
ROOF DECK

DETAIL NUMBER: **MB-19**

IKO COMMERCIAL
Specify with Confidence.

Built-Up Roof Tie-In New Roof at Same Level

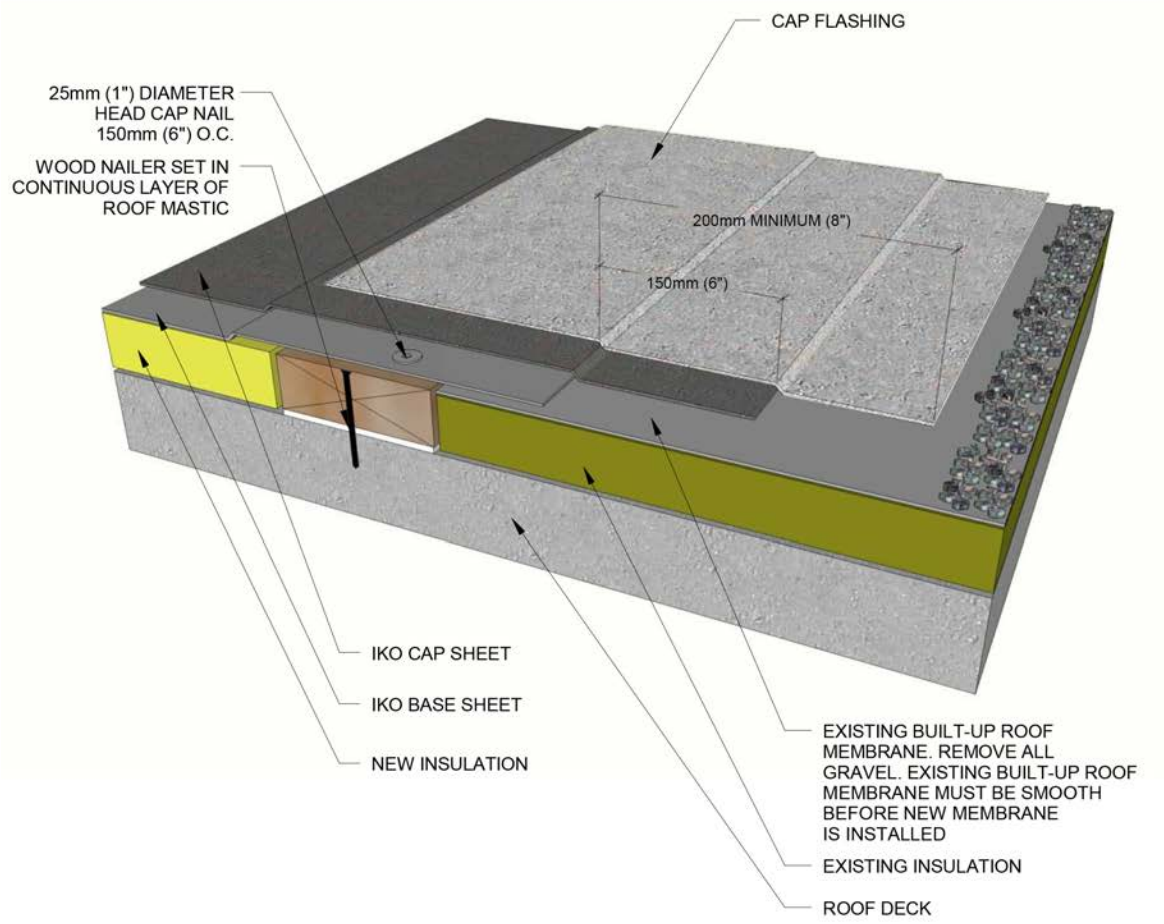

Built-Up Roof Tie-In with Tapered Edge

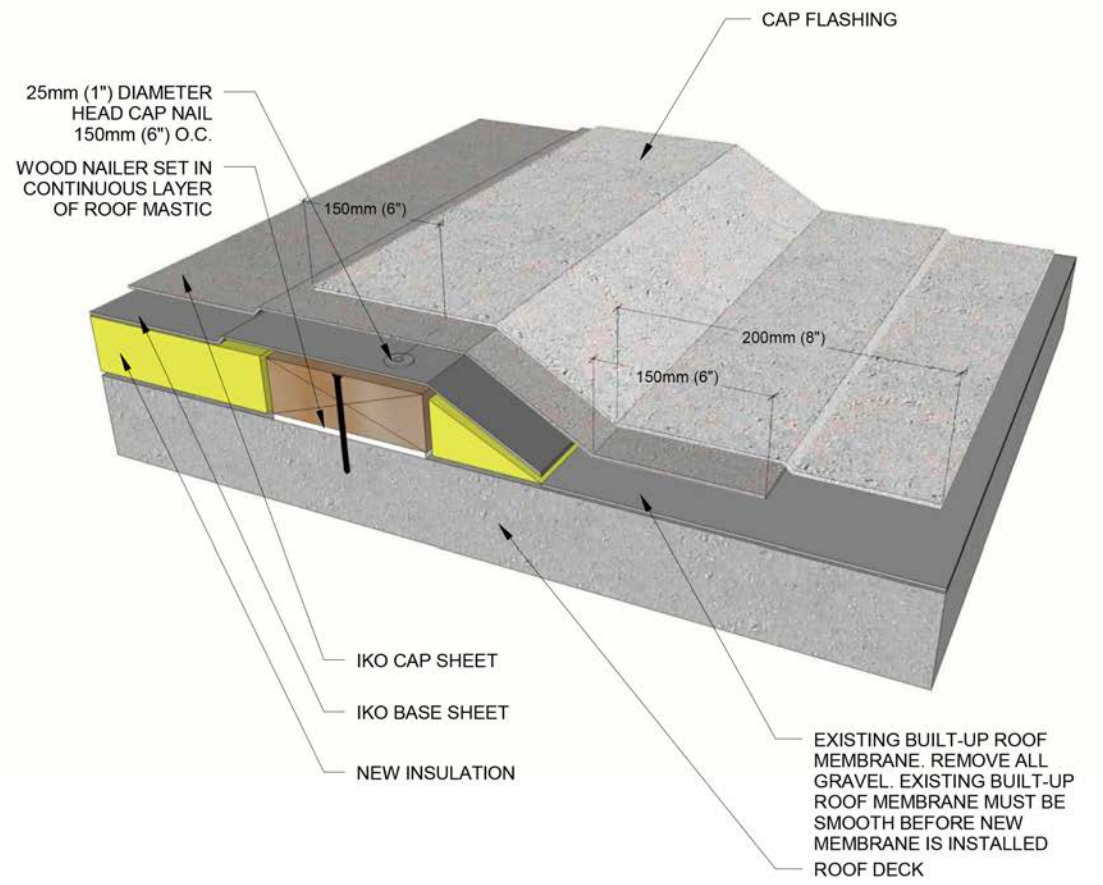

New Pitch Pan with Single Section Flashing

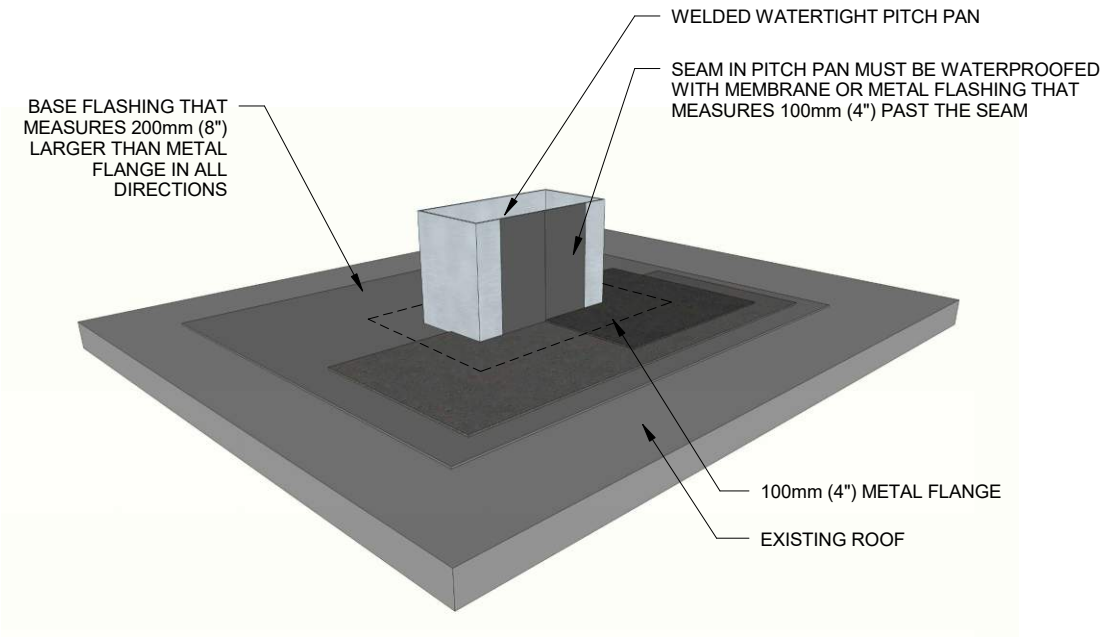

Support Sleeper

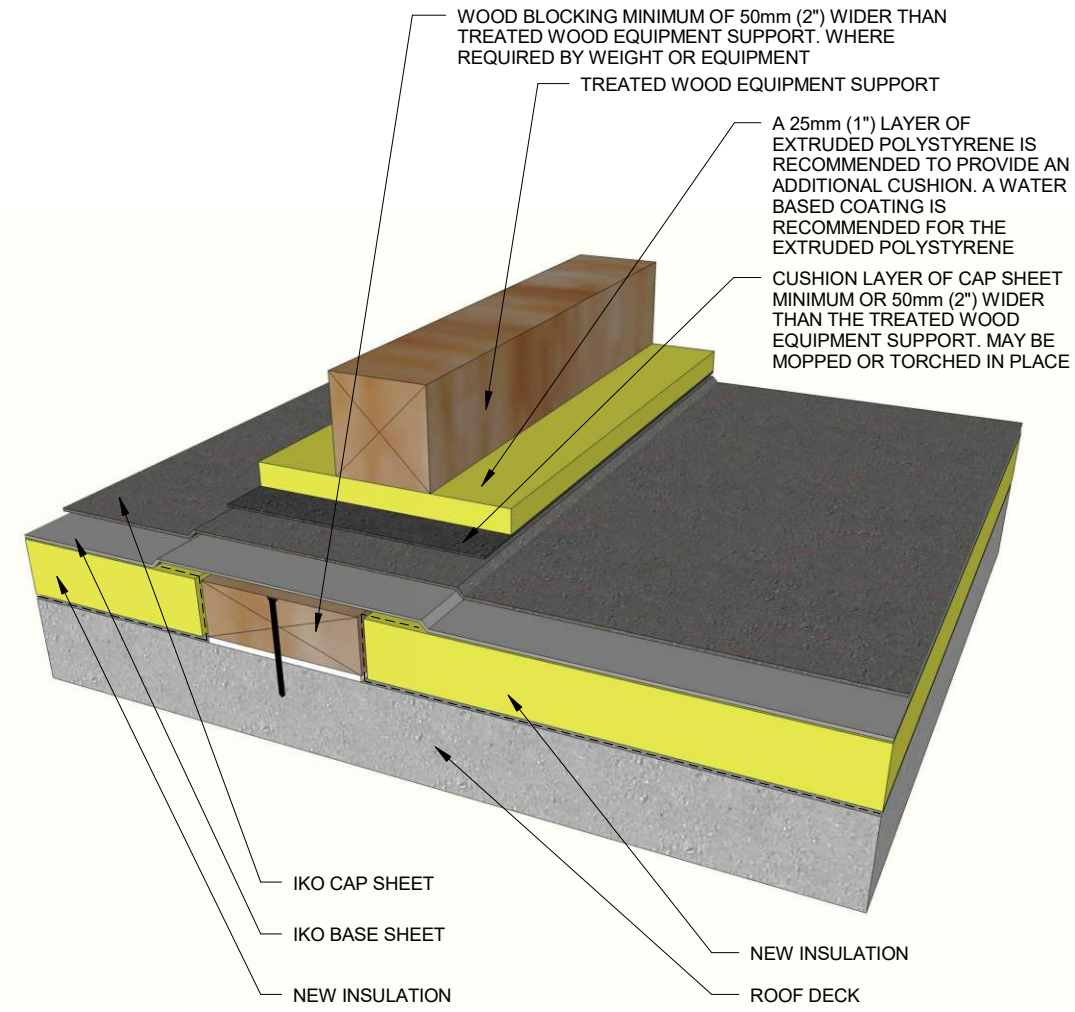

Outside Corner

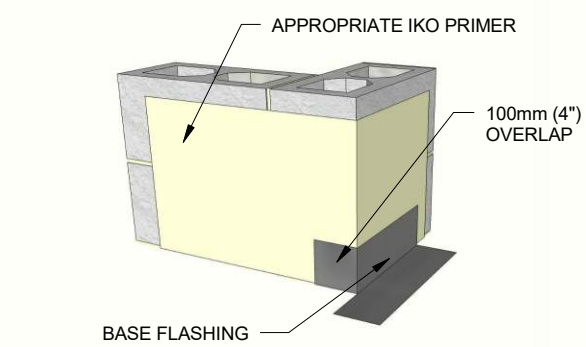

STEP ONE

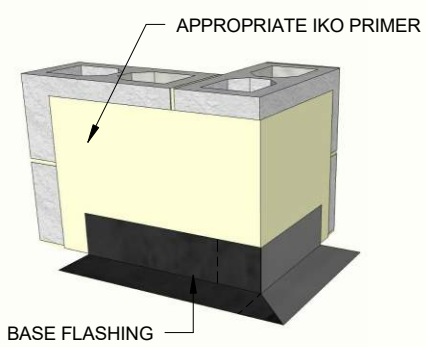

STEP TWO

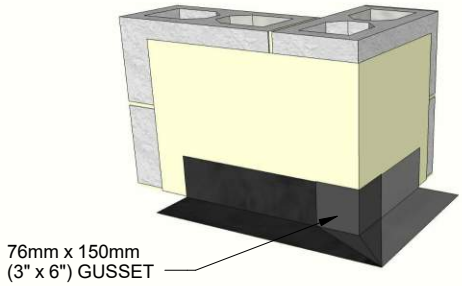

STEP THREE

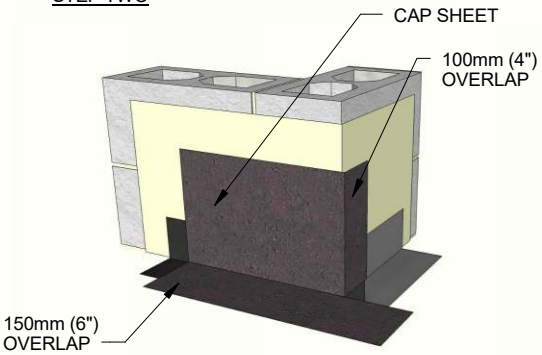

STEP FOUR

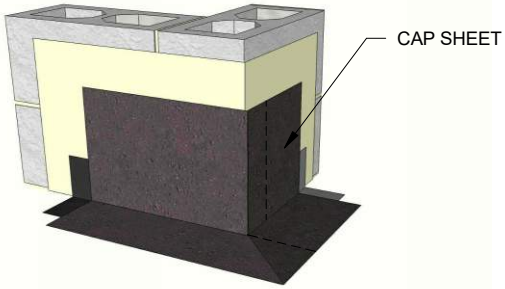

STEP FIVE

Inside Corner without Cant Strip

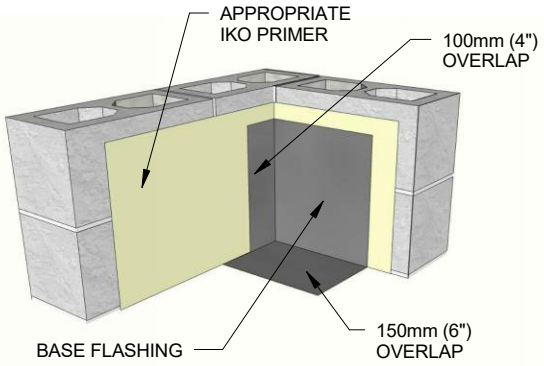

STEP ONE

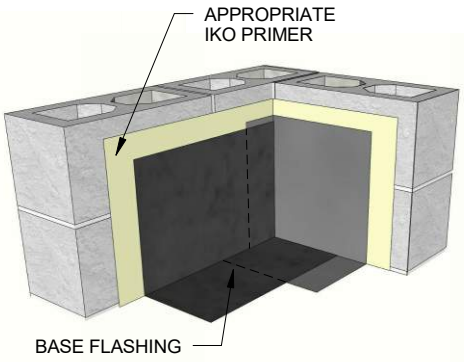

STEP TWO

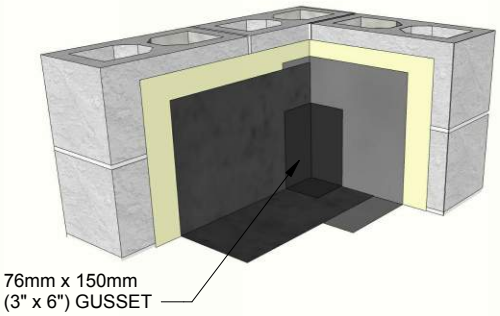

STEP THREE

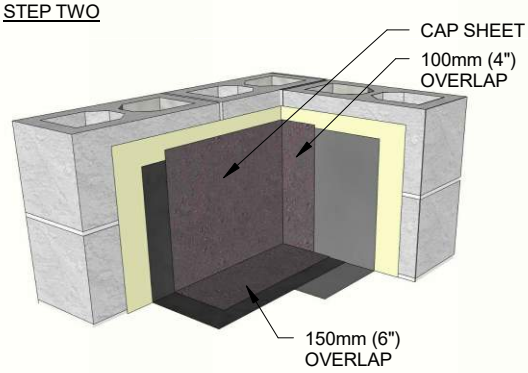

STEP FOUR

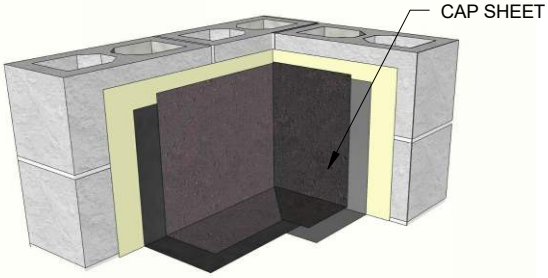

STEP FIVE

Termination Bar

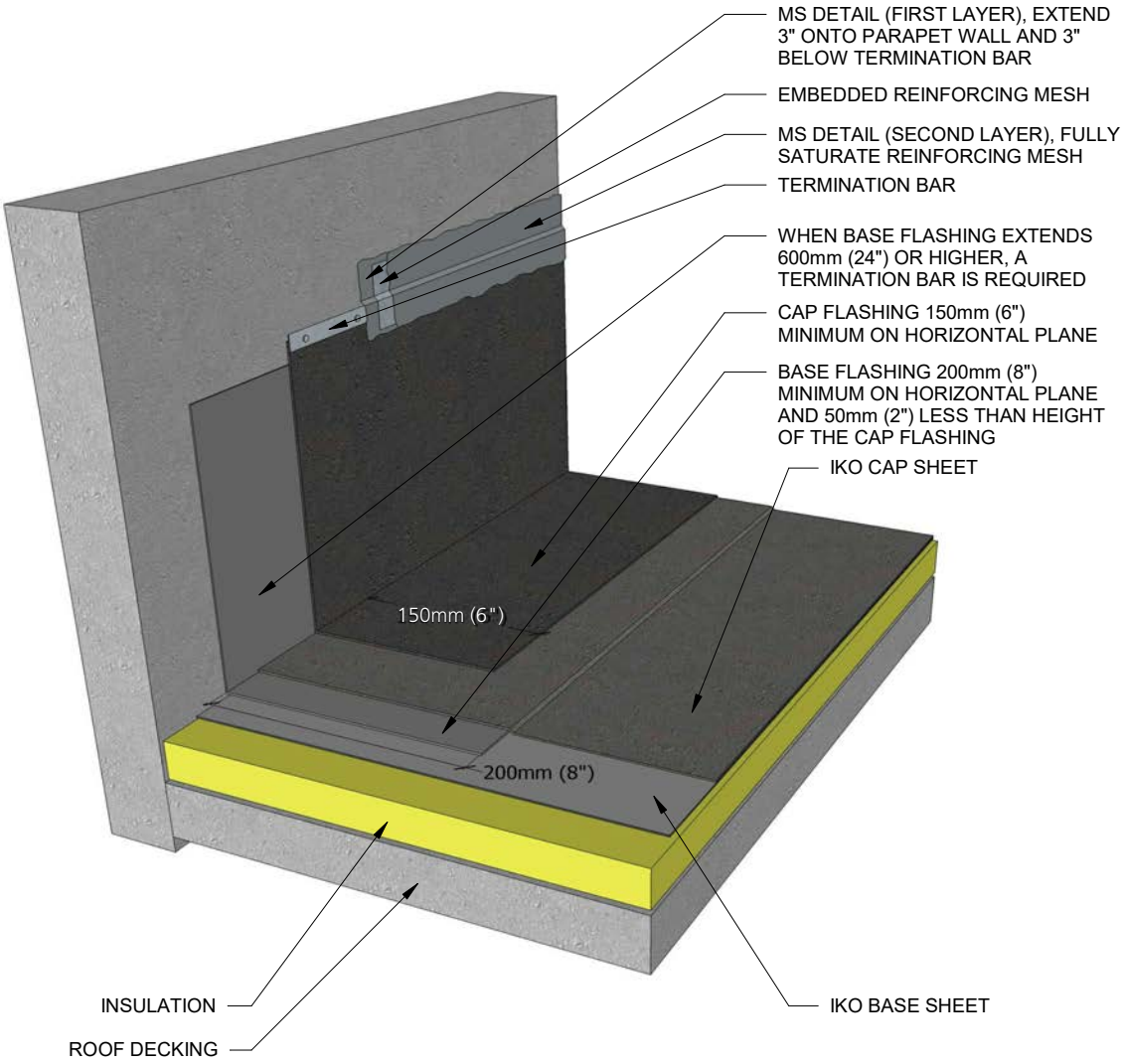

Base Sheet Perimeter Attachment – Horizontal

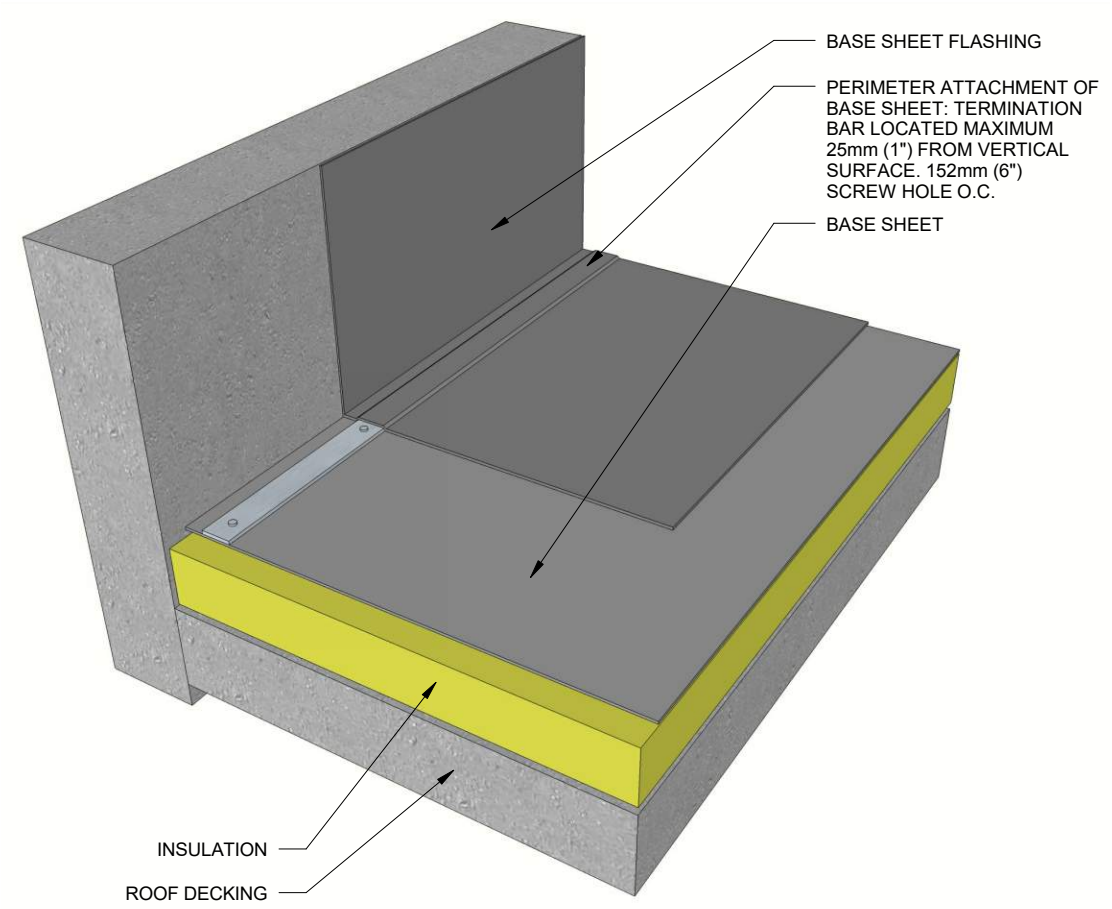

DETAIL NUMBER: **MB-29**

IKO COMMERCIAL
Specify with Confidence.

Base Sheet Perimeter Attachment – Vertical

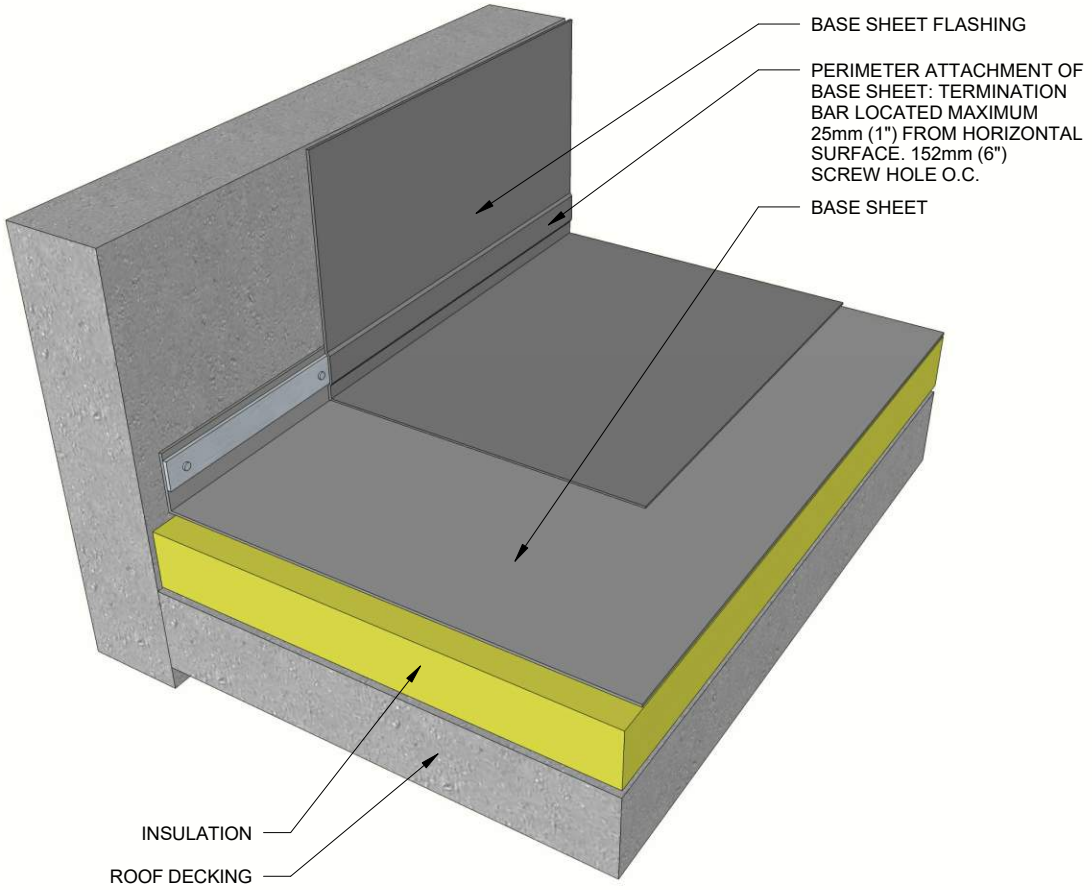

Base Sheet Perimeter Attachment – Angle

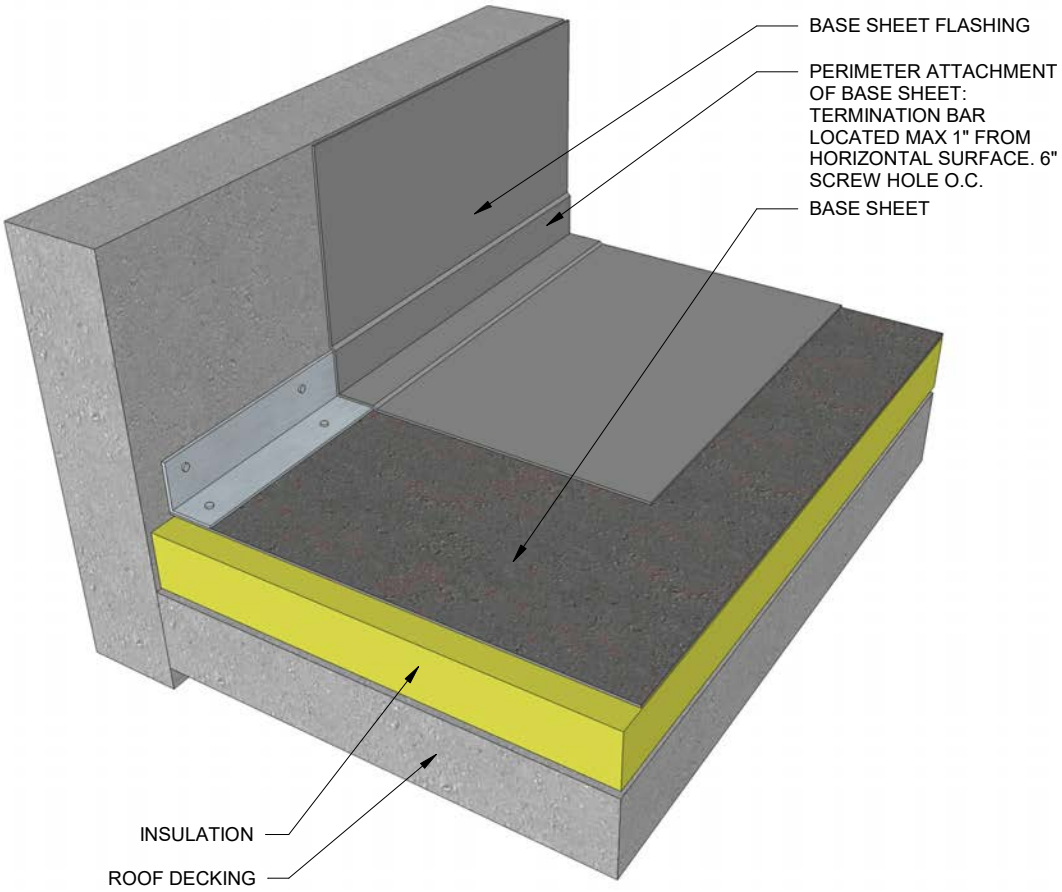

DETAIL NUMBER: **MB-31**

IKO COMMERCIAL
Specify with Confidence.

Protectobase at Parapet Detail

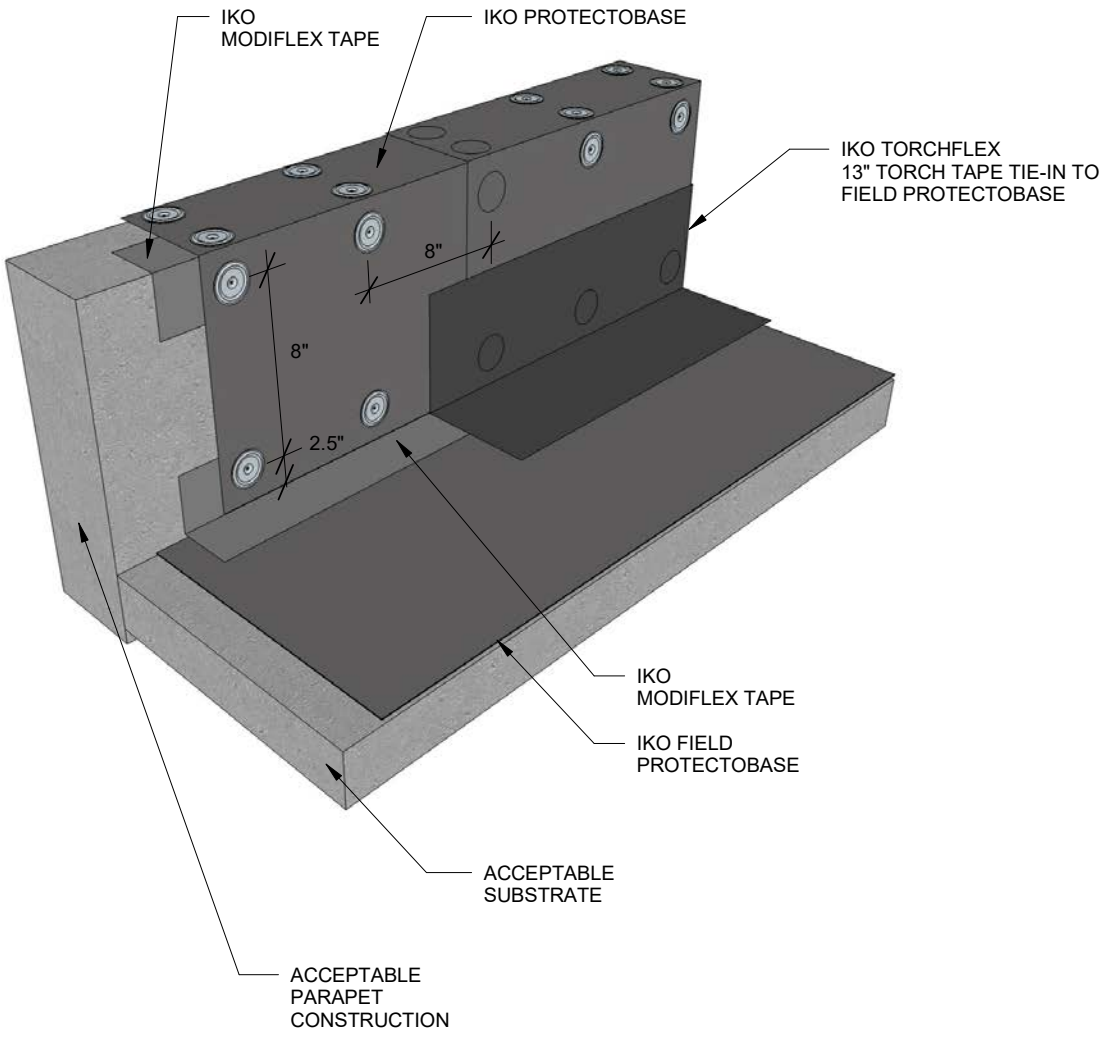

For approved mechanical fastener, contact
IKO Technical Services for more information

Protectobase Pre-Strip at Vertical

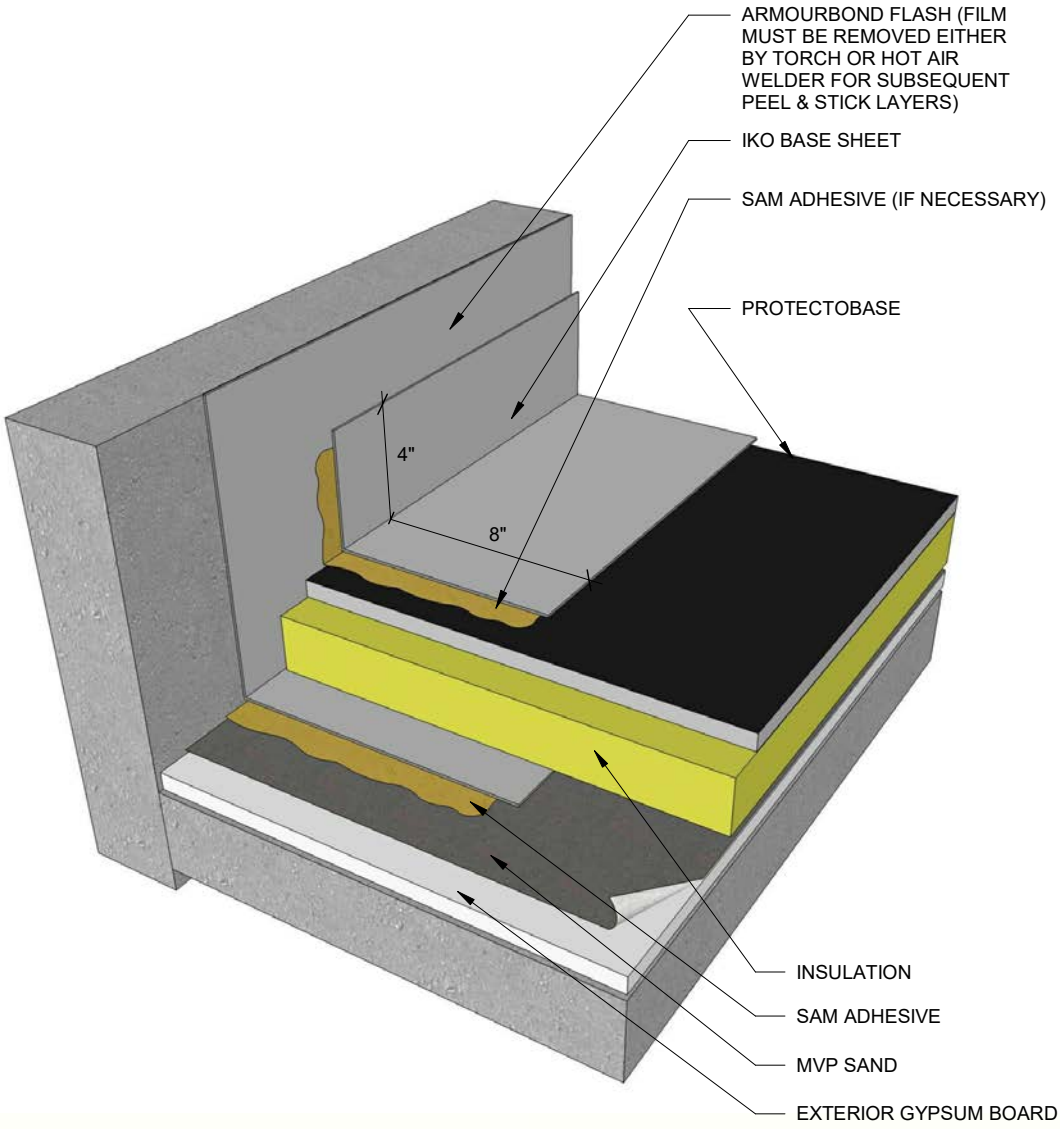

Perimeter Flame Free

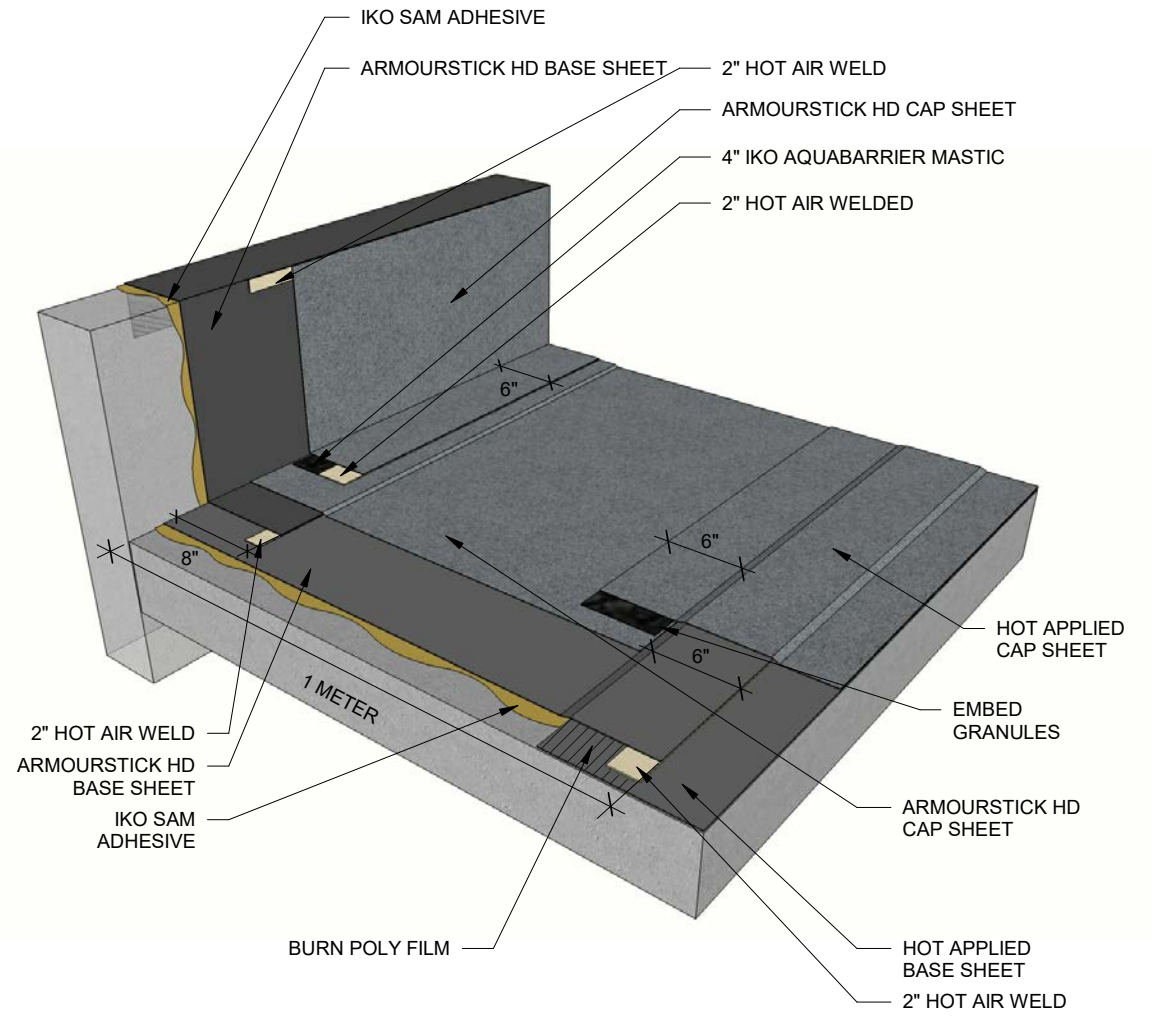

Perimeter Flame Free – Low Temperature

