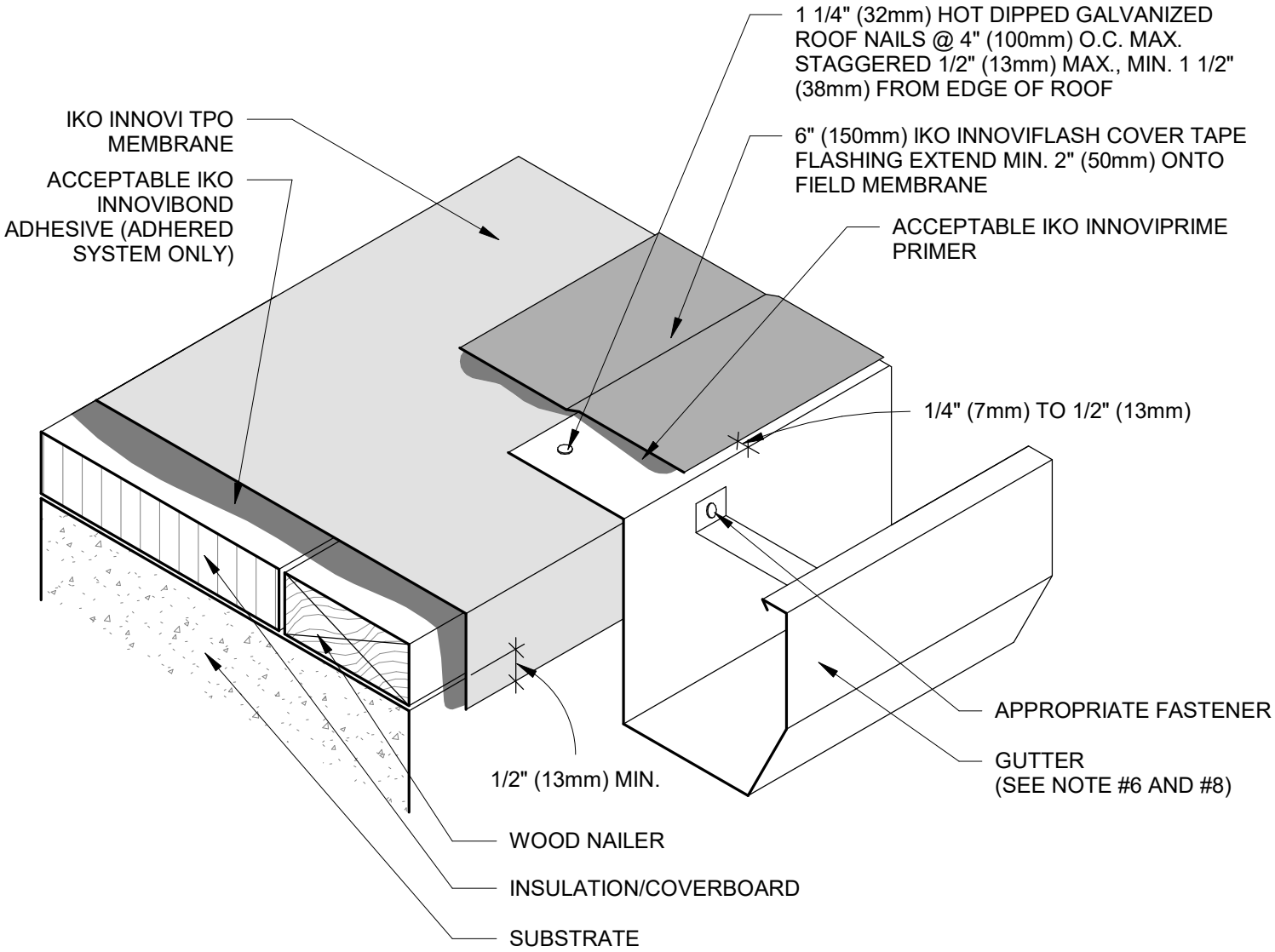


NOTES:
1. REFER TO IKO.COM/COMM FOR THE MOST UP TO DATE INSTALLATION INFORMATION.
2. ANY CARPENTRY OR METAL WORK SHOULD BE DESIGNED AND CONSTRUCTED IN ACCORDANCE WITH LOCAL CODE REQUIREMENTS AND/OR PROJECT SPECIFICATIONS. THESE COMPONENTS SHOULD BE REVIEWED AND APPROVED BY A LICENSED DESIGN PROFESSIONAL. IKO ASSUMES NO RESPONSIBILITY FOR THE INSTALLATION OF THE ASSOCIATED COMPONENTS OR DAMAGE TO THE ROOF SYSTEM DUE TO FAULTY INSTALLATION.
3. REFER TO EXISTING ROOFING MANUFACTURERS' SPECIFICATIONS FOR SURFACE PREPARATION PROCEDURES.
4. IKO INNOVIPRIME TPO PRIMER MUST BE USED TO PREPARE THE MEMBRANE PRIOR TO APPLYING IKO INNOVIFLASH COVER TAPE.
5. ROUND ALL METAL CORNERS AND PLACE BACK OF GUTTER STRAP ¼" (7 MM) BELOW TOP OF WOOD NAILER.
6. CONSTRUCT AND ANCHOR GUTTER IN ACCORDANCE WITH SMACNA RECOMMENDATIONS.
7. WOOD NAILER MUST BE INSTALLED TO MEET APPLICABLE BUILDING CODES.
8. FLANGE OF THE METAL GUTTER MUST BE FULLY SUPPORTED BY WOOD AND TERMINATED AT LEAST ½" (13 MM) FROM WOOD EDGE.
9. CONTACT IKO TECHNICAL DEPARTMENT FOR BALLASTED ROOF SYSTEMS.
10. IF THE FLANGE OF THE METAL GUTTER IS NOT COMPLETELY COVERED WITH IKO INNOVIFLASH COVER TAPER, THEN AN ADDITIONAL PIECE OF COVER TAPE SHALL BE INSTALLED AT THE METAL SPLICE.
11. TO ENSURE FORMABILITY, SLIGHT HEAT-FROM THE SURFACE OF THE TPO PRODUCTS AT STEP-OFFS AND ANGLE CHANGES.

| Title: GUTTER WITH TPO COVER TAPE | | Detail Number: T-RE-1 |
|---|---|---|
| Issue Date: 8/01/2025 | Maximum Warranty Term: 20-Years | Not to Scale |

IKO COMMERCIAL
Specify with Confidence.
INNOVI TPO