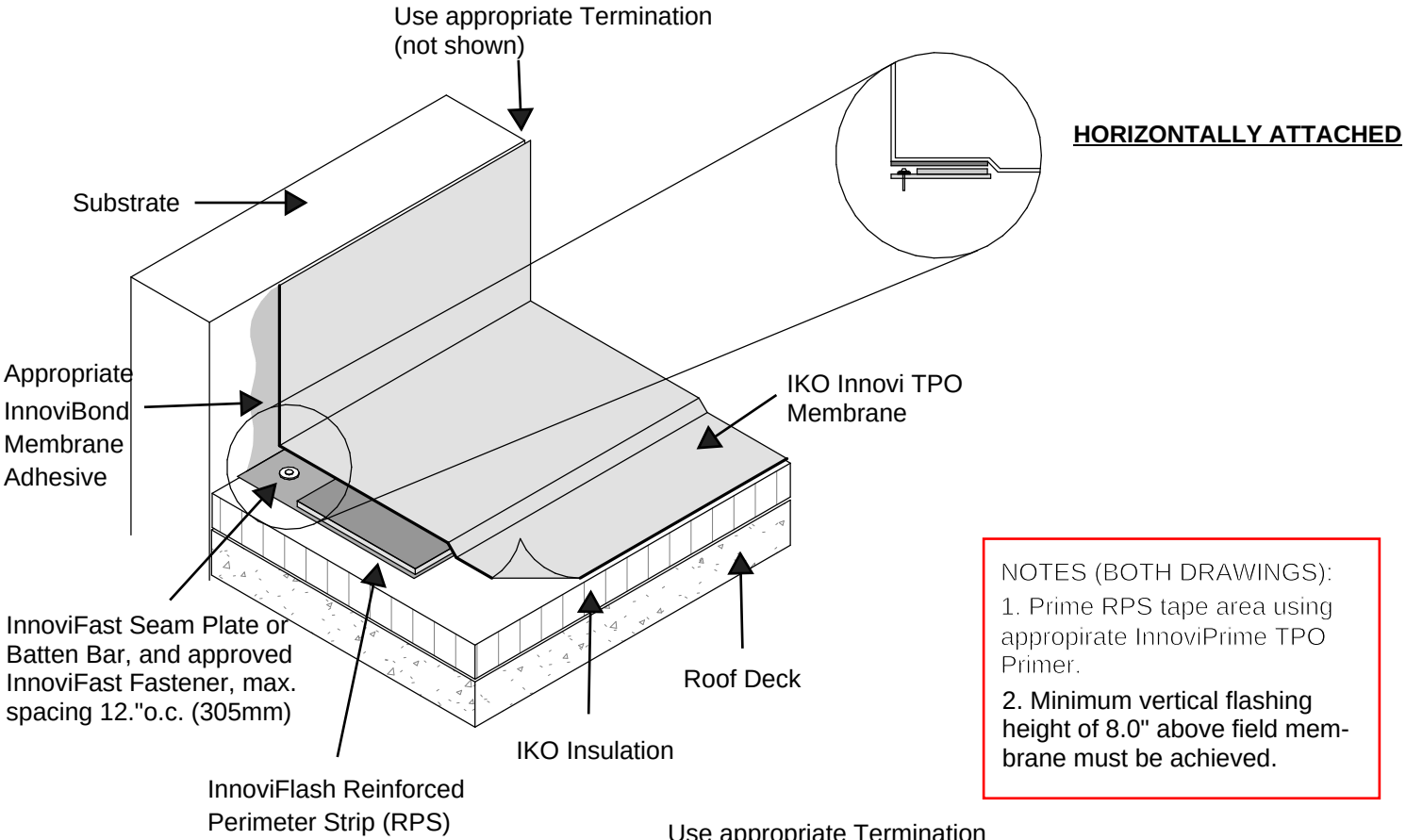

NOTES (BOTH DRAWINGS):

1. Prime RPS tape area using appropirate InnoviPrime TPO Primer.
2. Minimum vertical flashing height of 8.0" above field membrane must be achieved.

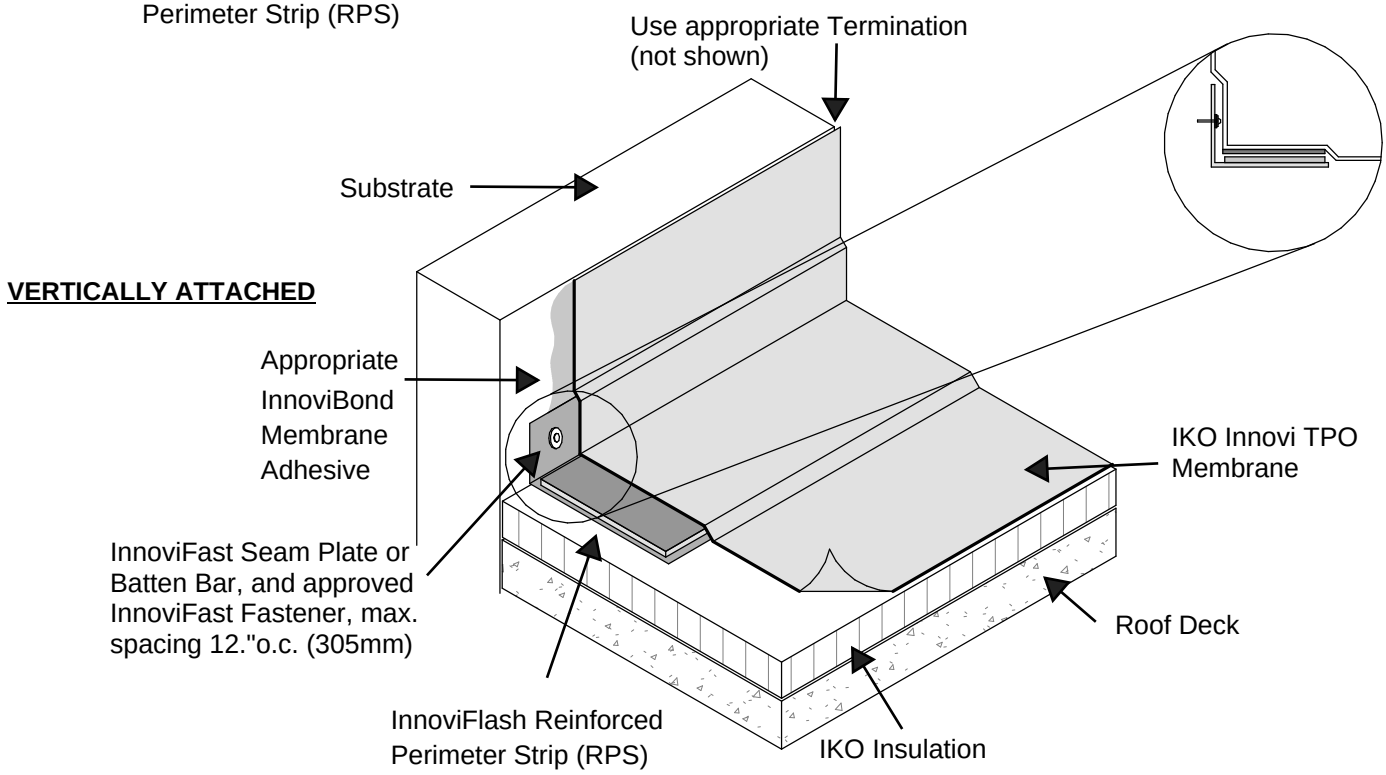

BASE FLASHING - REINFORCED PERIMETER STRIP (RPS)

BA-4

IKO COMMERCIAL
Specify with Confidence

INNOVI TPO